Total No. of Questions : 10]

SEAT No :

P2153

[Total No. of Pages : 6

[5059]-536

B.E.(Mechanical Engineering)

RELIABILITY ENGINEERING

(2012 Pattern) (Semester - I) (End Semester)(Elective)

Time : 2½ Hours] *[Max. Marks : 70*

Instructions to the candidates:

1) ***All questions are compulsory i.e. Solve Q.1 or Q.2, Q.3, or Q.4, Q.5or Q.6, Q.7 or Q.8, Q.9 or Q.10.***
2) ***Figures to the right indicate full marks.***
3) ***Assume suitable data if necessary.***
4) ***Use of electronic pocket calculator is allowed.***
5) ***Neat diagrams must be drawn wherever necessary.***

Q1) a) Explain the delta star method to determine reliability of bridge network.**[4]**

b) Accelerometers of 350 numbers were tested for 120 hours and the number of failed accelerometers out of 350 accelerometers is tabulated as given below. Find the hazard rate and reliability and tabulate the results. **[6]**

Time interval (hrs.)	0-20	20-40	40-60	60-80	80-100	100-120
Number of failed accelerometers	157	73	55	33	20	12

OR

Q2) a) Explain the term product liability and state the most common basic causes of failures of engineering product. **[4]**

P.T.O.

b) For the system shown in Fig.1, find the reliability of the system using conditional probability approach. **[6]**

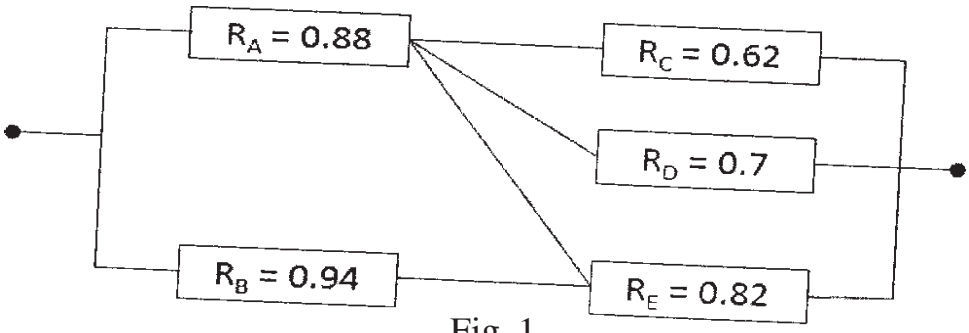

Fig. 1

Q3) a) explain the difference between discrete distributions and continuous distributions. Give two types of each distribution. **[4]**

b) A system consists of 4 subsystems in series. Each subsystem consists of some number of modules. Determine the minimum acceptable failure rates and reliabilities of various subsystems so as to have system reliability of 0.96 for 40 hours mission time using : "AGREE" method of allocation. The necessary information for subsystem is given below: **[6]**

Subsystem	Number of modules (in each subsystem)	Importance factor	Operating time (hours)
1	15	0.83	34
2	22	1.00	40
3	13	1.00	40
4	18	0.78	31

OR

Q4) a) What is reliability allocation? Write the advantages of reliability allocation method. **[4]**

b) Calculate the reliability of the system shown in Fig.2. The number in each block shows the reliability of each component. **[6]**

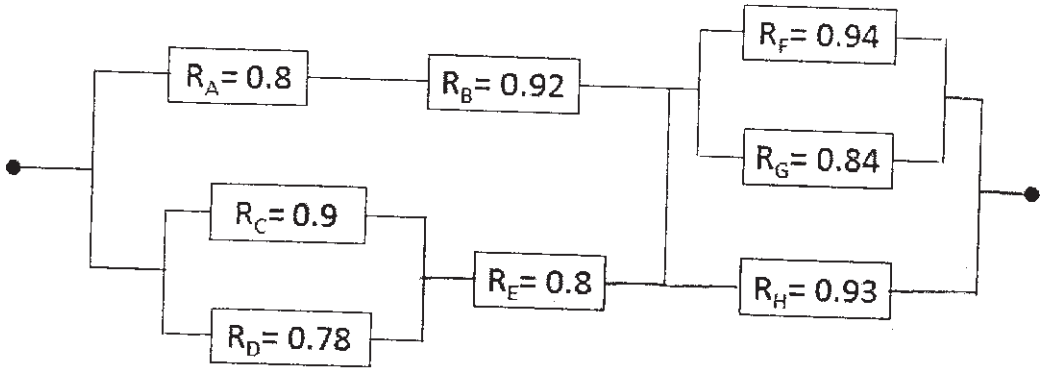

Fig. 2

Q5) a) Explain availability and maintainability. Show that mean time to repair (MTTR) is the reciprocal of repair rate, from the basic maintainability equation. **[8]**

b) A robotic welding system has to be designed with a reliability value of 0.96 for 800 hours. Operational availability of robotic welding system is required to be 0.89 over the same period of time. consider the mean administrative and logistic time as 30% of mean time to repair Assuming a constant hazard rate for failure and ignoring the preventive maintenance downtime find the mean time to repair (MTTR), mean down time (MDT) and inherent availability. **[8]**

OR

Q6) a) write down the salient points of costs of unreliability and built in -testing (BIT) technique. **[8]**

b) It has been observed that a failure pattern of a fuel injectoer system follows an exponential distribution with the probability of survival for 600 hours as 0.925. Obtain the inherent availability of the system over the same period of time if maintainability of the whole system over the same period of time is 0.82 Also, obtain the operational availability if administrative and logistic time is 120 hrs. Assume that the repair time follows an exponential distribution. **[8]**

Q7) a) Write the names and meanings of symbols shown below and show its application. **[8]**

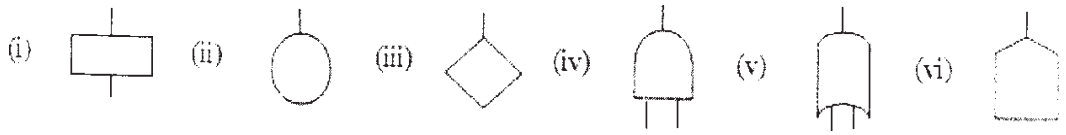

b) An electric travelling crane is mounted as shown in the figure 3. The operator gives the signal which is transmitted to the motor. The motor is located in the trolley which lifts load through the rope and hook. Construct a fault tree for the condition "load is not lifted" when operator gives signal. Assuming the probability of failure for each element as 0.08, find the reliability of the system. **[10]**

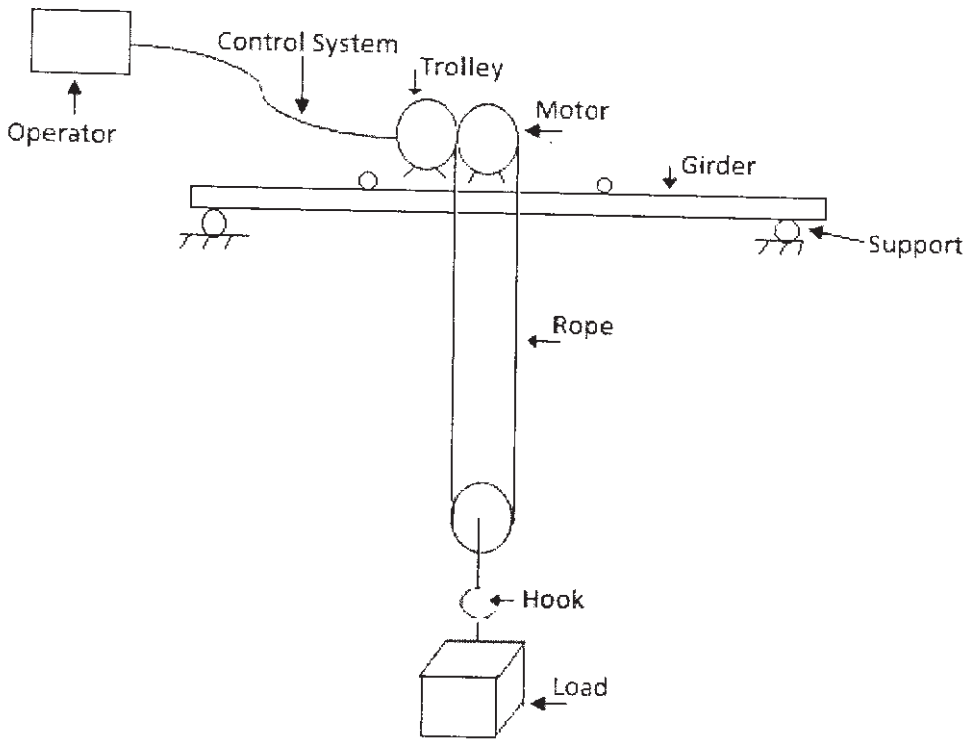

Fig. 3

OR

Q8) a) Carry out the failure mode and effect analysis of a bolt used for clamping an I.C. engine cylinder and head together. Tabulate any 4 probable failure modes, causes and effects for bolt. **[8]**

b) Draw the fault tree diagram for the system configuration shown in the Fig.4. Write minimum tie sets and find the reliability of the system from the reliability of individual elements shown in figure, assuming them to be independent. **[10]**

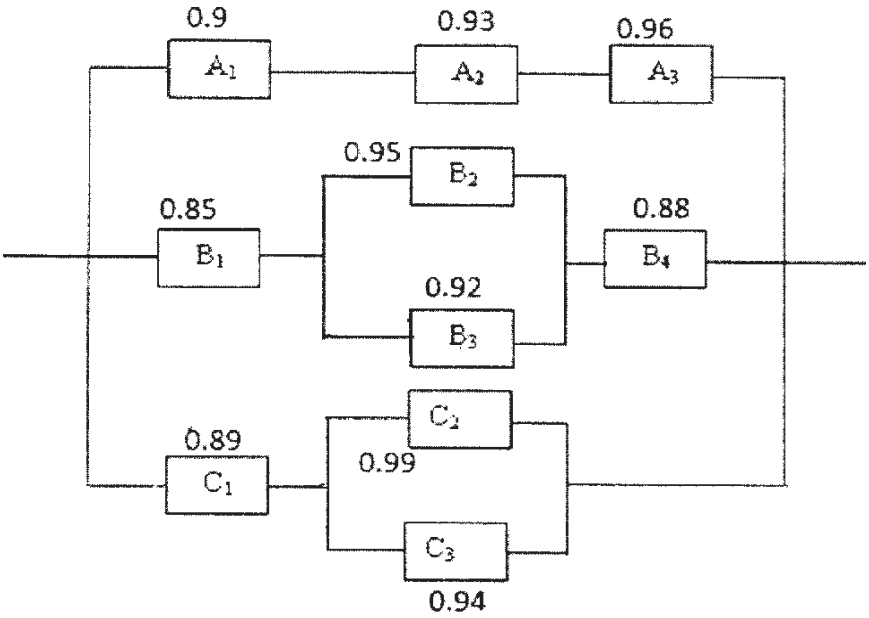

Figure 4

Q9) a) A machine shaft of 50 mm diameter is subjected to torsional mean stress of 220 MPa and standard deviation of 30 MPa. The shaft is made up of medium cabon steel with a mean yield strength of 400 MPa and standard deviation of 65MPa Assuming normal distribution, find the reliability of the shaft with the help of data from the standard normal table given below. How much is the central (average) factor of safety for the shaft? If the average factor of safety is required to be 2.5, suggest the modifications to be done. **[8]**

Z	2.47	2.48	2.49	2.50	2.51	2.52	2.53	2.54	2.55
Ø(Z)	0.9932	0.9934	0.9936	0.9938	0.9940	0.9941	0.9943	0.9944	0.9946

b) Explain in detail about the need of data acquisition and the points to be considered while doing it. **[8]**

OR

Q10) a) Failure data of 11 CFLs is given below. Use mean ranking and median ranking method to find reliability of CFls and plot the graph between failure time and reliability for both methods. **[8]**

CFL No.	1	2	3	4	5	6	7	8	9	10	11
Failure time Hrs	340	294	567	431	142	265	389	530	456	78	684

b) Classify the different tests carried out for Reliability testing and explain in brief about each type. **[8]**

✡ ✡ ✡