Important Instructions to examiners:

1) The answers should be examined by key words and not as word-to-word as given in the model answer scheme.
2) The model answer and the answer written by candidate may vary but the examiner may try
to assess the understanding level of the candidate.
3) The language errors such as grammatical, spelling errors should not be given more Importance (Not applicable for subject English and Communication Skills.
4) While assessing figures, examiner may give credit for principal components indicated in the
figure. The figures drawn by candidate and model answer may vary. The examiner may give credit for any
equivalent figure drawn.
5) Credits may be given step wise for numerical problems. In some cases, the assumed constant
values may vary and there may be some difference in the candidate's answers and model answer.
6) In case of some questions credit may be given by judgement on part of examiner of relevant answer based on candidate's understanding.
7) For programming language papers, credit may be given to any other program based on equivalent concept.

Q.1- A) Attempt any THREE (3 x 4) (12)

I) State the steps involved in general design procedure. (4marks)

1. Recognition of need. First of all, make a complete statement of the problem, indicating the need, aim or purpose for which the machine is to be designed.

2. Synthesis (Mechanisms). Select the possible mechanism or group of mechanisms which will give the desired motion.

3. Analysis of forces. Find the forces acting on each member of the machine and the energy transmitted by each member.

4. Material selection. Select the material best suited for each member of the machine.

5. Design of elements (Size and Stresses). Find the size of each member of the machine by considering the force acting on the member and the permissible stresses for the material used. It should be kept in mind that each member should not deflect or deform than the permissible limit.

6. Modification. Modify the size of the member to agree with the past experience and judgment to facilitate manufacture. The modification may also be necessary by consideration of manufacturing to reduce overall cost.

7. Detailed drawing. Draw the detailed drawing of each component and the assembly of the machine with complete specification for the manufacturing processes suggested. Prepare assembly drawing giving part numbers, overall dimensions and part list. The component drawing is supplied to the shop flow for manufacturing purpose, while assembly drawing is supplied to the assembly shop

8. Production. The component, as per the drawing, is manufactured in the workshop.

OR Each Step : ½ Mark)

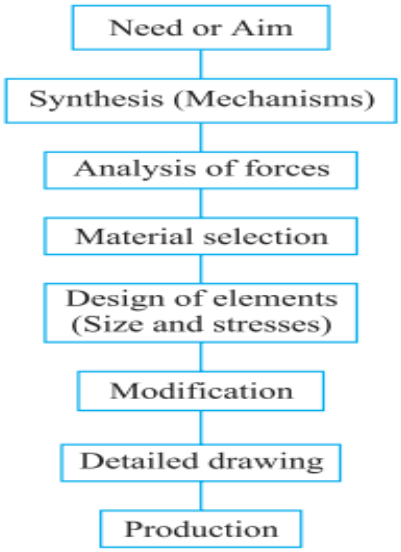

ii) Difference Between Knuckle Joint & cotter Joint:

Sr.No	Knuckle Joint	Cotter Joint
1	Can take only tensile load	Can take tensile & compressive load
2	Can permit angular movement between rods	Cannot permit angular movement
3	Subjected to bearing failure	Not subjected to bearing failure
4	No taper or clearance provided	taper or clearance provided
5	Application: tie bar, links of bicycle chain, joint for rail shifting mechanism	Application: cotter foundation bolt, joining two rods with a pipe, joining piston rod with c/s head

ANY 4 points ---------- 4 marks

iii) Lewis equation for strength of gear tooth

$$W_T = \sigma w \,.b.\, Pc\,.y = \sigma w\,.b.\pi m.\, y$$

..(Pc = πm)

(Equation :2 marks)

WT = Tangential load acting at the term

σw = Beam strength of the tooth

b = Width of the gear face

Pc = Circular pitch

m = Module

Y is known as Lewis form factor or tooth form factor **(Meaning of terms – 2 marks)**

iv)

Following are the three types of screw threads mostly used for power screws:

1. *Square thread.*
2. *Acme threads*

3.trapezoidal thread.

3. *Buttress thread* ***----------2marks***

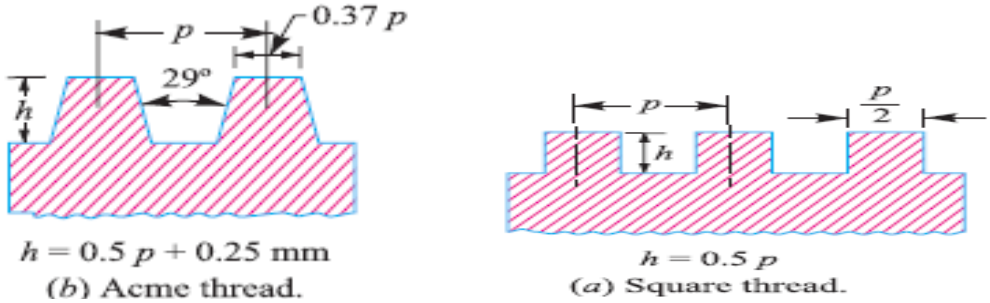

. **……ANY 2 thread Sketch. ----------*2marks***

Qu.1 b) Attempt Any ONE **1 x 6 Marks**

i) Stress Concentration:

Whenever a machine component changes the shape of its cross-section, the simple stress distribution no longer holds good and the neighborhood of the discontinuity is different.

This irregularity in the stress distribution caused by abrupt changes of form is called stress concentration. It occurs for all kinds of stresses in the presence of fillets, notches, holes, keyways, splines, surface roughness or scratches etc.

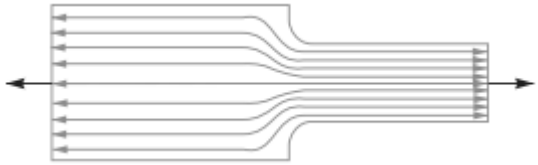

Causes of stress concentration are as under.

i) Abrupt changes in cross-section like in keyway, steps, grooves, threaded holes results in stress concentration.

ii) Poor surface finish – The surface irregularities is also one of the reason for stress concentration.

iii) Localized loading – Due to heavy load on small area the stress concentration occurs in the vicinity of loaded area.

iv)Variation in material properties – Particularly defects like internal flaws, voids, cracks, air holes, cavities also results in stress concentration.

…….**(2 mark)**

Two methods of reducing stress concentration :(Any two Methods with sketch 4 Marks)

1) Introducing additional notches and holes in tension member
2) Fillet radius ,undercutting & notches for member I bending
3) Reduction of stress concentration in threaded portion
4) Drilling additional holes for shaft

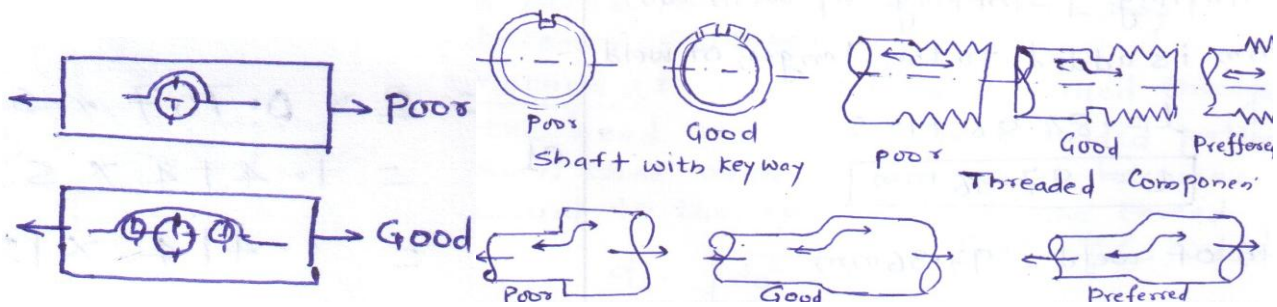

ii)

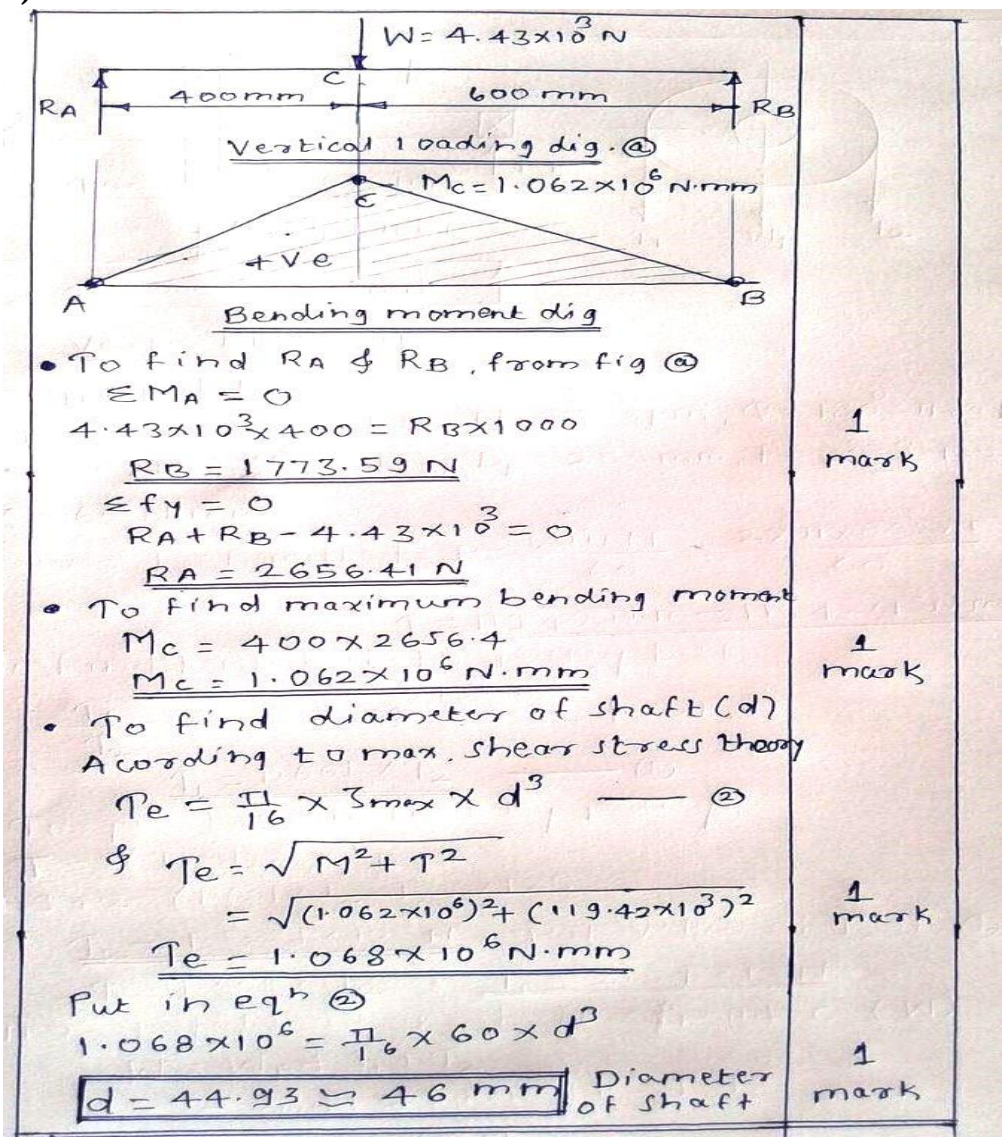

QU.2 Attempt any TWO

a) Hand Levers: **(Sketch : 03 marks , Each step or equation: 1M)**

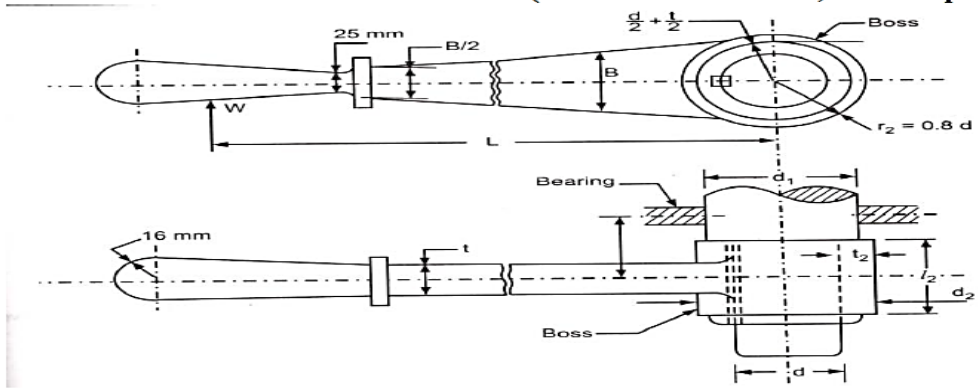

Let
P = Force applied at the handle,
L = Effective length of the lever,
σt = Permissible tensile stress, and
τ = Permissible shear stress.

Step I : Considering shaft is under pure torsion, we have,

$$T = \frac{\pi}{16} \cdot \tau \cdot d^3$$

But, twisting moment on shaft,

$$T = P \times L$$

∴ On equating, we have,

$$P \times L = \frac{\pi}{16} \cdot \tau \cdot d^3$$

∴ Diameter of shaft (d) may be obtained.

Step II : Using the empirical relations, fix the other dimensions as,

$$d_2 = 1.6d$$
$$t_2 = 0.3d$$
$$l_2 = d \text{ to } 1.2d$$
$$l = 2 \times l_2$$

Step III : Considering the shaft supported at the centre of the bearing under combined twisting and bending moment, we have,

$$M = P \times l \text{ and } T = P \times L$$

∴ Equivalent twisting moment,

$$T_e = \sqrt{M^2 + T^2} = \sqrt{(P \times l)^2 + (P \times L)^2} = P\sqrt{l^2 + L^2}$$

Also, equivalent twisting moment,

$$T_e = \frac{\pi}{16} \cdot \tau_{max} \cdot d^3$$

$$\therefore \quad P\sqrt{l^2 + L^2} = \frac{\pi}{16} \cdot \tau_{max} \cdot d^3$$

From here, value of d_1 = diameter of shaft supported at centre of bearings can be determined.

Step IV : Design of key : Let t_1 = thickness of key, w = width of key and l_1 = length of key.

After finding diameter of shaft (d), we can fix the dimensions for key as,

$$w = \frac{d}{4} \text{ and } t_1 = \frac{d}{6}$$

Considering shear failure of key,

We have, $$T = (w \cdot l_1 \cdot \tau) \times \frac{d}{2}$$

$\therefore$ Length l_1 can be determined.

Also, length l_1 may be taken as length of boss i.e. l_2.

Step V : Considering bending failure of lever, we can determine the cross-section of leve ıear the boss.

Let t = thickness of lever near the boss and B = width of height of lever near the boss.

We have,

Bending moment on the lever $= M = P \times (L - r_b)$

and Section modulus $= Z = \frac{1}{6} \cdot t \cdot B^2$

where, r_b = Radius of boss $= \frac{d_2}{2}$

$$\therefore \quad \text{Bending stress, } \sigma_b = \frac{M}{Z}$$

$$= \frac{P \cdot (L - r_b)}{\frac{1}{6} \cdot tB^2}$$

Width of lever may be taken as, B = 4t to 5t.

From this equation, values of t and B can be determined.

(Sketch : 03 marks , Each step or equation: 1M)

b)(Dig-1 mark,step 1,2,3,4-1mark each, and for pin design 3marks)

Ans: It consist of two shafts, two key, flanges, key, pin, rubber bush, brass bush, & pin ,following are the designations of various coupling dimensions which are use for the design procedure.

d = diameter of shaft , **d_1**= diameter of enlarge portion of pin ,

d_2 =diameter of rubber bush , **d_b**= nominal diameter of pin,

D = outer diameter of hub , **D_1**= diameter of bolt circle

D_2= outer diameter of flange , ***l***= length of hub

l_b= length of bush in hub , **t_f** = thickness of flange **t_p**=thickness of protection

n = no of pins, and no of pins are selected from diameter of shaft

=3 for d upto 30mm

=4 for d upto 75 mm

=6 for d upto 110 mm

=8 for d upto 150 mm

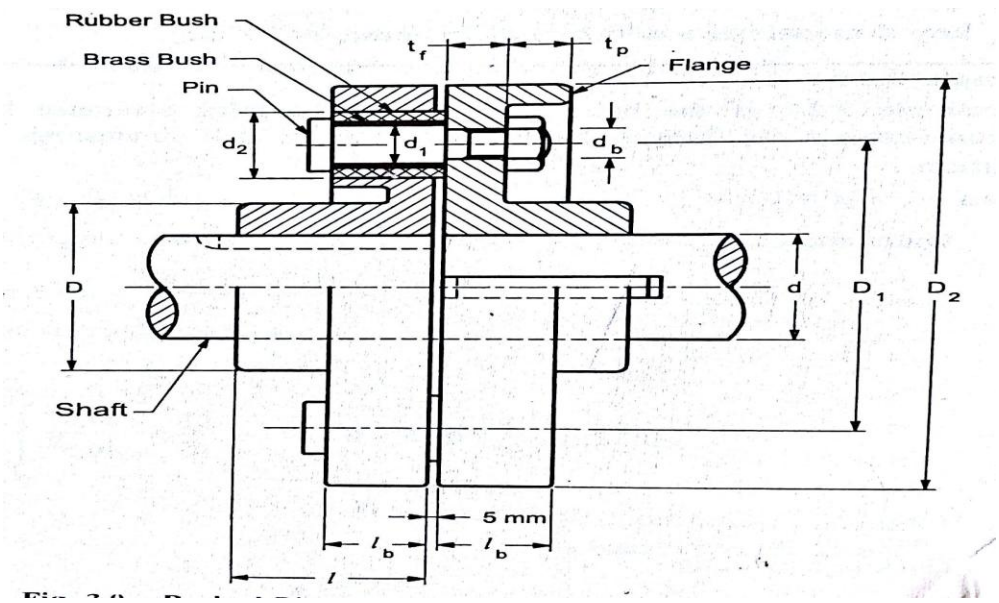

Step no 1: Design of shaft (d)

Considering maximum shear stress,

$$T=\frac{\pi}{16}\times\tau_{max}\times d^3 \text{.....(a)}$$

Step no 2: Design of key

Fix the dimension of key from the standard shaft diameter, and as per the requirement square or rectangular key can be selected,

w= width of key

t = thickness of key

l_k=length of key =**1.5d**by proportion……(1)

1. **For Square key** , w=t=d/4**……..(b)**
2. **For rectangular key,** w=d/4 & t=2/3w**…….(c)**
3. & length of key can be obtained **by shearing and crushing failure of key.**
   Considering shearing of key,
   $T=\tau_k \times w \times l_k \times d/2$ ……..(2)
   Considering crushing failure of key,
   $T=\sigma_c \times l_k \times d/2 \times t/2$……..(3)
   - Consider maximum value of length of key from equation 1,2,3

Step no 3: Design of hub

1. D = outer diameter of hub **D=2d**
2. *l*= length of hub ***l* =1.5d**
3. Tortional shear stress in the hub can be calculated from below equation,
   $$T=\frac{\pi}{16} \times \tau_h \times (1-k^4)$$

   Where, k=d/D

Step no 4: Design of flange

1. t_f = thickness of flange **t_f =0.5d**
2. t_p =thickness of protection **t_p =0.25d**
3. **Torque transmitted by flange**
   T=shear area × direct shear stress× outside radius of hub

$$T=\pi D\, t_f \times \tau_f \times D/2$$

From above equation value of τ_f can be calculated and checked

Step no 5: Design of pin

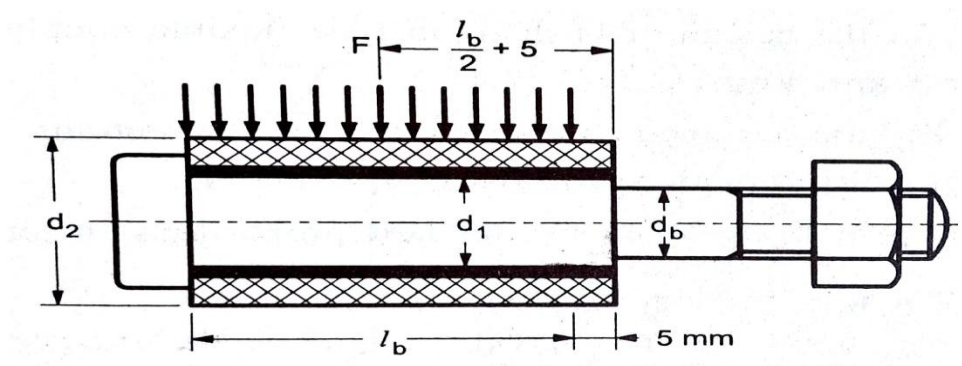

Fig .shows the pin with the rubber bush .The design of pin is as follows

- Nominal Diameter of pin (d_b)

$$d_b = \frac{0.5d}{\sqrt{n}} \longrightarrow (1)$$

- Diameter of enlarge portion of pin (d_1)

$$d_1 = d_b + 4 \longrightarrow (2)$$

- Outer Diameter of Rubber bush (d_2)

Assume that brass bush 2 mm thickness & rubber bush 6mm thickness are fitted

$$d_2 = d_1 + (2\times2) + (2\times6) \longrightarrow (3)$$

- Dia. of bolt circle (D_1)

$$D_1 = D + d_2 + (2\times8) \longrightarrow (4)$$

- Length of bush in the flange (l_b)

considering bearing pressure on pin

$$F = P_b \times d_2 \times l_b$$

Torque Transmitted,

$$T = n \times F \times D_1/2$$

$$T = n \times P_b \times d_2 \times l_b \times D_1/2 \longrightarrow (5)$$

- Stress induced in pin

Maximum bending moment on pin is,

$$M = F\left[\frac{l_b}{2} + 5\right]$$

∴ The maximum bending stress in pin

$$\sigma_b = \frac{M}{Z} = \frac{F \times \left[\frac{l_b}{2} + 5\right]}{\frac{\pi}{32} d_b^3} \longrightarrow (6)$$

where, $F = \frac{T}{n \times D_1/2}$

- Direct shear stress in pin

$$\tau_b = \frac{F}{\frac{\pi}{4} \times d_b^2} \longrightarrow (7)$$

- Principal stress in pin

$$\tau_{max} = \sqrt{\left(\frac{\sigma_b}{2}\right)^2 + \tau_b^2} \longrightarrow (8)$$

$$\sigma_{max} = \frac{\sigma_b}{2} + \sqrt{\left(\frac{\sigma_b}{2}\right)^2 + \tau_b^2} \longrightarrow (9)$$

C) i)

Stress –strain diagram for ductile material : (Dia: 02+ Explaination: 02 Marks)

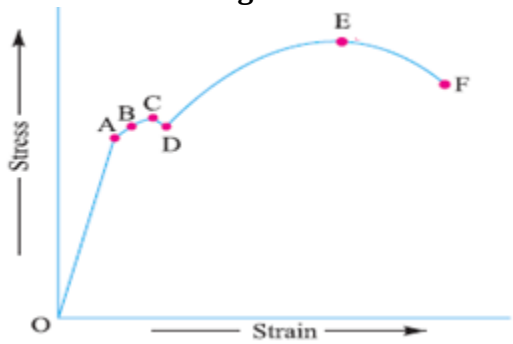

Point A: Proportional limit
Point B: Elastic limit
Point c: Upper yield point
Point D: Lower yield point
Point E: Ultimate tensile stress point
Point F: Breaking Stress point.

1. *Proportional limit*. We see from the diagram that from point *O* to *A* is a straight line, which represents
that the stress is proportional to strain. Beyond point *A*, the curve slightly deviates from the straight line. It is thus obvious, that Hooke's law holds good up to point *A* and it is known as ***proportional limit***. It is defined as that stress at which the stress-strain curve begins to deviate from the straight line.

2. *Elastic limit*. It may be noted that even if the load is increased beyond point *A* upto the point *B*, the material will regain its shape and size when the load is removed. This means that the material has elastic properties up to the point *B*. This point is known as ***elastic limit.*** It is defined as the stress developed in the material without any permanent set.

3. *Yield point*. If the material is stressed beyond point *B*, the plastic stage will reach *i.e*. on the the load, the material will not be able to recover its original size and shape. A little consideration will show that beyond point *B*, the strain increases at a faster rate with any increase in the stress until the point *C* is reached. At this point, the material yields before the load and there is an appreciable strain without any increase in stress. In case of mild steel, it will be seen that a small load drops to *D*, immediately after yielding commences. Hence there are two yield points *C* and *D*. The points *C* and *D* are called the ***upper*** and ***lower yield points*** respectively. The stress corresponding to yield point is known as ***yield point stress.***

4. *Ultimate stress*. At *D*, the specimen regains some strength and higher values of stresses are required for higher strains, than those between *A* and *D*. The stress (or load) goes on increasing till the point *E* is reached. The gradual increase in the strain (or length) of the specimen is followed with the uniform reduction of its cross-sectional area. The work done, during stretching the specimen, is transformed largely into heat and the specimen becomes hot. At *E*, the stress, which attains its maximum value is known as ***ultimate stress*.** Itis defined as the largest stress obtained by dividing the largest value
of the load reached in a test to the original cross-sectional area of the test piece.

5. *Breaking stress*. After the specimen has reached the ultimate stress, a neck is formed, which decreases the cross-sectional area ofthe specimen, as shown in Fig. The stress is, therefore, reduced until the the specimen breaks away at point *F*. The stress corresponding to point *F* is known a**s** ***breaking stress*.**

(Dia: 02+ Explanation: 02 Marks)

C ii)

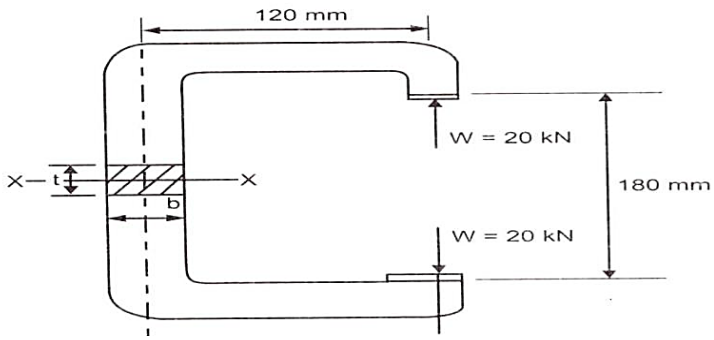

Given data : $W = 20\text{ kN} = 20 \times 10^3\text{ N},\ b = 2t$

$e = 120\text{ mm},\ \sigma_t = 100\text{ N/mm}^2$

At section X-X :

Step I : Direct stress : $\sigma_o = \dfrac{W}{A} = \dfrac{20 \times 10^3}{b \times t} = \dfrac{20 \times 10^3}{2t^2} = \dfrac{10 \times 10^3}{t^2}$

Step II : Bending stress : $\sigma_b = \dfrac{M}{Z} = \dfrac{W \times e}{\frac{1}{6} tb^2}$

$$\sigma_b = \frac{20 \times 10^3 \times 120 \times 6}{t \times (2t)^2} = \frac{3.6 \times 10^6}{t^3}$$

---------- **2 Marks**

Step III : Resultant stress :

$$\sigma_{tR} = \sigma_o + \sigma_b$$

$$\therefore \quad \frac{10 \times 10^3}{t^2} + \frac{3.6 \times 10^6}{t^3} = 100$$

$$\therefore \quad \frac{10 \times 10^3 \times t + 3.6 \times 10^6}{t^3} = 100$$

$$\therefore \quad 10 \times 10^3\, t + 3.6 \times 10^6 = 100t^3$$

$$\therefore \quad 100t^3 - 10 \times 10^3\, t = 3.6 \times 10^6$$

Divide the equation by 100,

$$\therefore \quad t^3 - 100\, t = 3.6 \times 10^4;$$ Using trial and error

---------- **1 Marks**

t= 34 mm & b= 2t =2 x 34 = 68 mm ---------- **1 Marks**

QU.3. Attempt any Four **4 x 4 marks**

a) **i) Fe E 230 :** Steel with min.Yield strength of 230N/mm^2

ii) X20Cr 18 Ni 2:Specification: It is ALLOY STEEL having Carbon 0.20% ,Chromium 18% and Nickel 2%

iii)35 C 8 : steel with 0.35% carbon & 0.8% Manganese.

iv) 40 Ni 2 Cr 1 Mo 20 : Alloy Steel having 0.4% carbon,0.5% Nickel, 0.25% chromium,2.8% Molybdenum.(**1 Mark for each correct specification)**

b) Design of Offset Link:

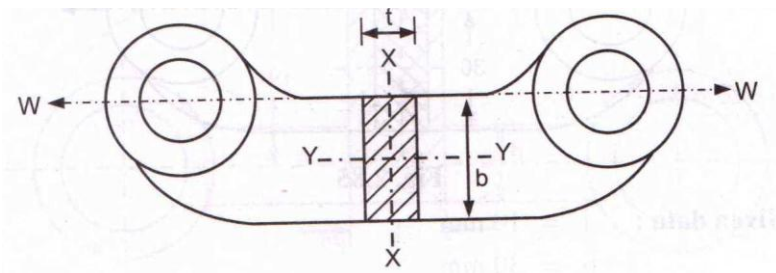

Step I : Direct Stress: $\sigma d = \frac{W}{A} = \frac{1000}{b\,X\,t} = \frac{1000}{3t\,X\,t}$

$\sigma d = = \frac{1000}{3t^2}$ **……..1mark**

Step II: Bending Stress:

$$\sigma b = \frac{M}{Zyy} = \frac{WXe}{\frac{1}{6}.t.b^2} = \frac{1000\,X\,\frac{B}{2}}{\frac{1}{6}.t.b(3t)^2}$$

$$\sigma b = \frac{1000\,X\,3t\,X\,6}{2.t.9.t^2}$$

$$\sigma b = \frac{1000}{t^2}$$ **……..1mark**

Step III: Total Stress: $\sigma t = \sigma d + \sigma b$

$$60 = \frac{1000}{3t^2} + \frac{1000}{t^2}$$

$$60 = \frac{3000 + 1000}{3t^2}$$

$$3t^2 = \frac{4000}{60}$$

t=4.71 mm

b=3 t = 3 x 4.71 =14.14 mm **…… 2 Marks**

c) Prove that for a square key, permissible crushing stress is always twice the permissible shearing stress.

Ans: Let,

T = Torque transmitted by the shaft
F = Tangential force acting at the circumference of the shaft
d =Diameter of shaft
l =Length of key
w = Width of key
t =Thickness of key and
τ & σc = shear and crushing stresses for the material of key.

A little consideration will show that due to the power transmitted by the shaft, the key may fail due to shearing or crushing.

Considering shearing of the key, the tangential shearing force acting at the circumference of the shaft,

F = Area resisting shearing × Shear stress = $l \times w \times \tau$

Therefore, Torque transmitted by the shaft,

$T = FX\frac{d}{2} = l.w.\tau.\frac{d}{2}$ …… I **…….. 1 mark**

Considering crushing of the key, the tangential crushing force acting at the circumference of the shaft,

F = Area resisting crushing × Crushing stress $= l.\frac{t}{2}.\ \sigma c$

Therefore, Torque transmitted by the shaft

$T = FX\frac{d}{2} = l.\frac{t}{2}.\ \sigma c.\frac{d}{2}$ …… II **…….. 1 mark**

The key is equally strong in shearing and crushing, If equ. I = equ. II

$$l.w.\tau.\frac{d}{2} = l.\frac{t}{2}.\ \sigma c.\frac{d}{2}$$

As key is square, w=t=d/4

$$l.\frac{d}{4}.\tau.\frac{d}{2} = l.\frac{d}{8}.\ \sigma c.\frac{d}{2}$$

$\sigma c = 2.\tau$…….. Proved …..**…….. 2 marks**

d) Bolts of uniform strength.

(Explanation including two methods of making bolt of uniform strength accompanied with figure. 2 marks each)

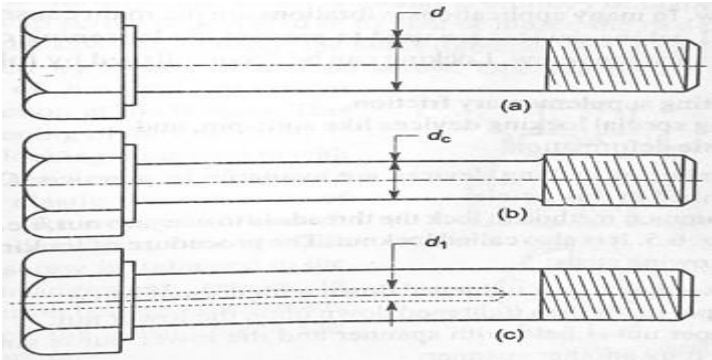

In an ordinary bolt shown in **Fig. (a)**, the effect of the impulsive loads applied axially is concentrated on the weakest part of the bolt i.e. the cross-sectional area at the root of the threads. In other words, the stress in the threaded part of the bolt will be higher than that in the shank. Hence a great portion of the energy will be absorbed at the region of the threaded part which may fracture the threaded portion because of its small length.

If the shank of the bolt is turned down to a diameter equal or even slightly less than the core diameter of the thread (d) as shown in **Fig. (b)**, then shank of the bolt will undergo a higher stress. This means that a shank will absorb a large portion of the energy, thus relieving the material at the sections near the thread. The bolt, in this way, becomes stronger and lighter and it increases the shock absorbing capacity of the bolt because of an increased modulus of resilience. This gives us bolts of uniform strength. The resilience of a bolt may also be increased by increasing its length.

A second alternative method of obtaining the bolts of uniform strength is shown in **Fig. (c).** An axial hole is drilled through the head as far as the thread portion such that the area of the shank becomes equal to the root area of the thread

e) Classification of Keys:

Keys are classified on the basis of shape and application of keys..... **1Mark**

Keys are **1) Sunk Key** :

a) Rectangular sunk key b) square sunk key c) Gib head key d) feather key e) Woodruff key

2) Saddle key

a) Flat saddle key b) hollow saddle key

3) Round key

4) Splines ..... **1 mark**

Application: 1) Sunk Key : used for heavy duty application

a) Rectangular sunk key : for preventing rotation of gears and pulleys on shaft

b) Gib headed key: used where key to be removed frequently.

c) feather key: Machine tool

2) Saddle key: for light duty or low power transmission

3) Round key : Used for low Power drive

4) Splines: Where providing axial movement between shaft and mounted member

Application: 1 mark

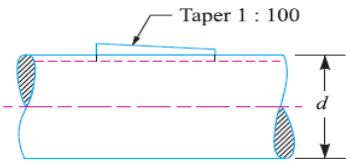

Sunk Key

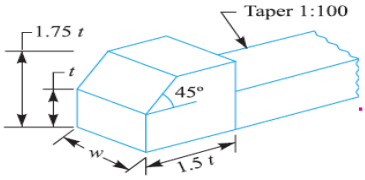

Gib headed

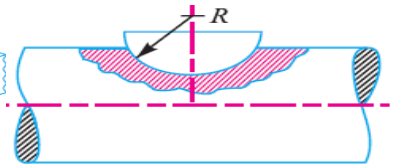

woodruff key

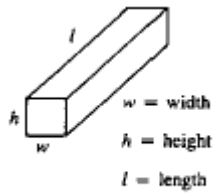

(a) Flat key

Skeches: 1 Mark

Qu.4.Attempt any THREE **3 x 4 MARKS**

i)Meaning of color code in Aesthetics:……. **1/2 mark for each color Meaning**

1) Red: Danger,Hot
2) Orange: Possible Orange
3) Green : Safe
4) Blue: Cold

ii) Terms w.r.t Springs:

1) **Spring Index:**It is a ration of mean diameter of coil to the diameter of spring wire.
   Mathematically $C = \frac{D}{d}$ **…….1/2 mark**
2) **Spring stiffness:** It is load required per unit deflection of the spring.
   $spring\ Rate = \frac{W}{\delta}$**…….1/2 mark**
3) **Free length of spring :** Length of spring when spring is free or unloaded condition
   Lf= n' x d + δmax + 0.15 δmax…… **…….1/2 mark**
4) **Solid Length of spring:** it is the product of number of coils and diameter of wire
   Or Length of spring when spring is fully loaded condition.
   Ls= n' x d **…….1/2 mark**

ii) Effect of Keyway on strength of shaft:

The keyway is a slot machined either on the shaft or in hub to accommodate the key. It is cut by vertical or horizontal milling cutter.

A little consideration will show that the keyway cut into the shaft reduces the load carrying capacity of the shaft.

This is due to the stress concentration near the corners of the keyway and reduction in the cross-sectional area of the

shaft. It other words, the torsional strength of the shaft is reduced.

The following relation for the weakening effect of

the keyway is based on the experimental results by H.F. Moore.

$$e = 1 - 0.2\left(\frac{w}{d}\right) - 1.1\left(\frac{h}{d}\right)$$

where e = Shaft strength factor.

w = Width of keyway,

d = Diameter of shaft, and

h = Depth of keyway =Thickness of key (t)/2

It is usually assumed that the strength of the keyed shaft is 75% of the solid shaft, which is somewhat higher than the value obtained by the above relation.

In case the keyway is too long and the key is of sliding type, then the angle of twist is increased in the ratio $K\theta$as given by the following relation

$$K\theta = 1 + 0.4\left(\frac{w}{d}\right) - 0.7\left(\frac{h}{d}\right)$$

where $k\theta$= Reduction factor for angular twist.

Iv)Given Data:

Diameter of Cylinder = D=350mm

Pressure Inside the cylinder = P=0.75 N/mm^2

Nominal diameter of bolts do=20mm

permissible stress = $\sigma t =$ 20 N/mm2

Step I : dc=0.84 do =0.84 x 20 = 16.8 mm

Total load acting on the cylinder cover Wn=P X A

Wn= P X $\frac{\pi}{4}$ D^2

Wn= 0.75 X$\frac{\pi}{4}$ (350)^2 =72.16X10^3 N **…… 2 Mark**

Load on each bolt =W= 72.16 X 10^3/no. of bolts

Considering the failure of bolt in tension

$$\sigma t = \frac{W}{\frac{\pi}{4}\ X\ (dc)^2}$$

$$20 = \frac{72.16\ X\ 10^3}{nx\ \frac{\pi}{4}\ X\ (16.8)^2}$$

$$n = \frac{72.16\ X\ 10^3\ X4}{20\ x\ \frac{\pi}{4}\ X\ (16.8)^2}$$

n=16.27 $\cong$ 18

So, Number of Bolts required = 18**…… 2 Mark**

4 b) Attempt any ONE **6 Marks**

i) The different modes of failure of gear teeth:

1. *Bending failure*.
2. *Pitting*.
3. *Scoring*.

4. *Abrasive wear*.
5. *Corrosive wear* ***Any 4 modes, 2 mark***

Remedies to avoid failure:

1. *Bending failure*.

In order to avoid such failure, the module and face width of the gear is adjusted so that the beam strength is greater than the dynamic load.

2. *Pitting*.

In order to avoid the pitting, the dynamic load between the gear tooth should be less than the wear strength of the gear tooth.

3. *Scoring*.

This type of failure can be avoided by properly designing the parameters such as speed, pressure and proper flow of the lubricant, so that the temperature at the rubbing faces is within the permissible limits.

4. *Abrasive wear*.

This type of failure can be avoided by providing filters for the lubricating oil or by using high viscosity lubricant oil which enables the formation of thicker oil film and hence permits easy passage of such particles without damaging the gear surface.

5. *Corrosive wear*.. In order to avoid this type of wear, proper anti-corrosive additives should be used.

Any 4 Remedies , 4marks

4.B. ii)

i)Transverse Shear Stress: - When a section is subjected to two equal and opposite forces acting tangentially across the section such that it tends to shear off across the section. The stress produces is called as transverse shear stress. **……01 mark**

From figure

Mathematically transverse shear stress is represented as,

$\tau = F/A$

Where,

F = Tangential force applied

A = Area of cross section = $(\pi/4)\ d^2$

d = Diameter of rivet. **……01 mark**

ii)Compressive Stress: When a body is subjected to two equal & opposite axial pushes ,then the internal resistances set up in the material is called as compressive stress.**……01 mark**

It is denoted by σc

σc =P/A Where ,P: Axial compressive force ,A : Cross Sectional Area.**……01 mark**

iii) Torsional stress: When a machine component is under the action of two equal and opposite couples i.e. twisting moment or torque, then component is said to be torsional and the stresses set up due to torsion are called as torsional shear stress. **……01 mark**

Consider a component of circular cross-section. 'd' in diameter, subjected to torque T, Torsional shear stress is given by, basic torsion equation

$T/J = \tau/r = G\theta/L$

$\tau = T.r/J$

Where,

r = distance of outer fibre from neutral axis = d/2

J = Polar moment of inertia of cross- section = $(\pi/64)^4$**……01 mark**

Q.5.

a)

W =20 KN = 20 X 10^3 N

P=24 mm

d=120 mm

D1=150 mm R1= 75 mm

D2= 300 mm R2= 150 mm

Tan Ø= μ =0.18, $\mu c = 0.25$

Since,Screw is double start, Lead of screw = 2 p =2 x24 =48 mm

Tan $\alpha = \frac{Lead}{\pi d} = \frac{2p}{\pi d}$, $\alpha = tan^{-1}\frac{2p}{\pi d}$

$\alpha = tan^{-1}\frac{48}{\pi x 120}$ = 7.25°

Ø= $tan^{-1}\mu$ =$tan^{-1}x\ 0.18$ = 10.20° **1 Mark**

Torque Required to lift the load

T1= W.tan ($\alpha + Ø$)$\frac{d}{2}$

T1= 20 x 10 3tan ($7.25 + 10.20$)$\frac{120}{2}$ = 377.27 N.m **1 Mark**

Torque required in overcoming frictional resistance = Te

Assuming Uniform Wear condition

Te = $\mu c\ .W.R$

Mean radius R=$\frac{R1+R2}{2} = \frac{75+150}{2} = 112.5\ mm$

Te=0.25 x 20 x 103 x 112.5 =562.5 N.m ..... ***1 Mark***

Total Torque =Tt=T1+Te

=377.27 + 562.5 = 940 N.m ..... **1 Mark**

Force required at the end of lever

Tt= P1 x l

940 x 103 =P1 x 400

P1= 2350mm

Torque Required to lower the load

T1= W.tan ($Ø - \alpha$)$\frac{d}{2}$

= 20 x 103 x tan (10.203 -7.25) x 120/2

=61.90 N-m .....**2 Marks**

Total Torque = T_2 + Te = 61.90 +562.5 =624.40 N.m **1 Mark**

Force required at the end of the lever to lower the load

P_2 = Tt/L = 624.40 X 10^3 /400 = 1561 N. **1 Mark**

b)

Given data, $D_v = 60mm$, $P = 1.2 N/mm^2$, $\tau = 500 N/mm^2$
$G = 80 \times 10^3 N/mm^2$, $C = 5$, Initial compression = 35 mm
maximum lift of valve = 10mm.

Solution

① Diameter of spring wire (d)

• calculate load at which valve is blow off

$$W_1 = P \times \frac{\pi}{4} \times D_v^2 = 1.2 \times \frac{\pi}{4} \times (60)^2$$ 1 mark

$$W_1 = 3392.92 N$$

• maximum compression = Initial comp + Max. lift of valve

$$\delta_{max} = 35 + 10 = 45 mm$$

• at initial comp. of spring (35mm) ⟶ $W_1 = 3392.92 N$
Maximum comp. (45mm) ⟶ $W_2 = ?$

$$W_2 = \frac{3392.92 \times 45}{35} = 4362.32 N$$ 1 mark

• Wahl's stress concentration factor is,

$$K = \frac{4C-1}{4C-4} + \frac{0.615}{C} = \frac{(4\times5)-1}{(4\times5)-4} + \frac{0.615}{5} = 1.310$$

• The maximum shear stress is,

$$\tau = K \times \frac{8 W_2 C}{\pi d^2}, \quad d^2 = \frac{K \times 8 W_2 C}{\pi \tau}$$ 1 mark

$$\boxed{d = 12.06 mm}$$

• Then, mean diameter of spring wire = $D = C \times d$ 1 mark

$$D = 5 \times 12.06 = 60.3 mm$$

② Number of turns (n)

$$\delta_{max} = \frac{8 W_2 D^3 n}{G \times d^4} \quad \& \quad n = \frac{45 \times 80 \times 10^3 \times (12.06)^4}{8 \times 4362.32 \times (60.3)^3}$$ 1 mark

$$\boxed{n = 9.95 \simeq 10 \text{ turns}}$$

Assuming square & grounded end, total no of turn

$$\boxed{n' = n + 2 = 10 + 2 = 12 \text{ turns}}$$

③ Solid length (Ls) 1 mark

$$\boxed{L_s = n' \times d = 12 \times 12.06 = 144.72 mm}$$

④ Free Length (Lf)

$$L_f = n' \times d + \delta_{max} + 0.15 \delta_{max}$$
$$= (12 \times 12.06) + 45 + (45 \times 0.15)$$ 1 mark

$$\boxed{L_f = 196.47} mm$$

⑤ Pitch of coil (P)

$$P = \frac{\text{Free Length}}{n'-1} = \frac{196.47}{12-1} = 17.86 mm$$ 1 mark

$$\boxed{P = 17.86 mm}$$

C)

i) Differentiate between Sliding Contact and rolling contact bearing

SR.NO	Parameter	Sliding contact bearing	Rolling contact bearing
1	**Size**	large	small
2	**starting torque**	High	low

3	**noise**	Less noise	High noise
4	**Life**	Less life	Long life
5	**Cost**	Less cost	More costly
6	**Coeff. of friction**	High	less

ANY 4 points: 4 Marks

ii) Self locking of screw:

Torque required to lower the load

$$T = P \times \frac{d}{2} = W \tan(\phi - \alpha)\frac{d}{2}$$

If however , $\phi > \alpha$, the torque required to lower the load will be positive,indicating that an effort is applied to lower the load,such a screw is known as self locking screw.

A screw will be self locking

1) if the friction angle is greater than helix angle or coefficient of friction is greater than tangent of helix angle
   i.e. μ or $\tan\phi > \tan\alpha$.
2) if the frequency is less than 50 % i.e $\eta < 50\%$ **(Correct Ans: 03 M)**

a screw will be self locking if the friction angle is greater than helix angle or coefficient of friction is greater than tangent of helix angle .μ or $\tan\Phi$ >or = $\tan\alpha$.

We know that the efficiency of screw,

$$\eta = \frac{\tan\phi}{\tan(\alpha + \phi)}$$

Therefore, Efficiency for self locking screws,

$$\eta \le \frac{\tan\phi}{\tan(\phi+\phi)} \le \frac{\tan\phi}{\tan 2\phi} \le \frac{\tan\phi(1-\tan^2\phi)}{2\tan\phi} \le \frac{1}{2} - \frac{\tan^2\phi}{2}$$

From this expression we see that efficiency of self locking screws is less than ½ or 50%. If the efficiency is more than 50%, then the screw is said to be overhauling.

---------- **1 Mark**

Q.6. Attempt Any FOUR

a)

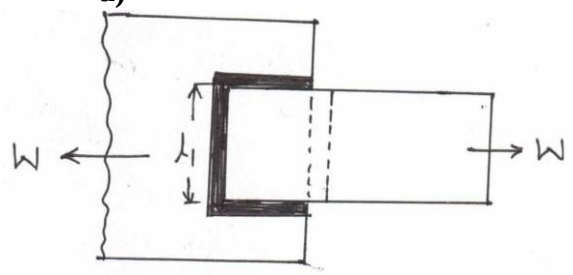

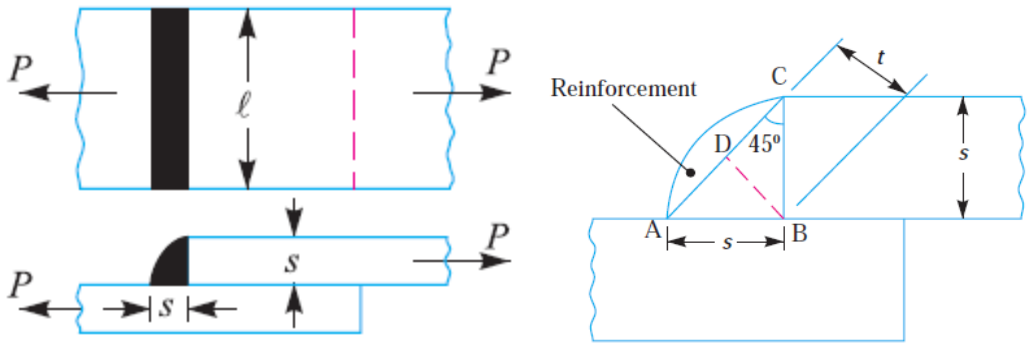

Sketch1 Mark

Let t = Throat thickness (BD),
s = Leg or size of weld,
= Thickness of plate, and
l = Length of weld,
From Fig. 10.7, from above we find that the throat thickness,
$t = s \times \sin 45° = 0.707\ s$
∴*Minimum area of the weld or throat area,
A = Throat thickness ×Length of weld= $t \times l = 0.707\ s \times l$……..***1 Mark***

If σt is the allowable tensile stress for the weld metal, then the tensile strength of the joint for single fillet weld,
P = Throat area × Allowable tensile stress = $0.707\ s \times l \times \sigma t$……..***1/2 Mark***
and tensile strength of the joint for double fillet weld,
$P = 2 \times 0.707\ s \times l \times \sigma t = 1.414\ s \times l \times \sigma t$……..***1/2 Mark***
If τ is the allowable shear stress for the weld metal, then the shear strength of the joint for single parallel fillet weld,
P = Throat area × Allowable shear stress = $0.707\ s \times l \times \tau$
and shear strength of the joint for double parallel fillet weld,
$P = 2 \times 0.707 \times s \times l \times \tau = 1.414\ s \times l \times \tau$ **……1/2 Marks**
The strength of the joint is given by the sum of strengths of single transverse and double parallel fillet welds. Mathematically,

$P = 0.707s \times l1 \times \sigma t + 1.414\ s \times l2 \times \tau$ **……1/2 Marks**

b)Design of Spring:

Given data: Central load on each spring = 2W =60KN

W= 30 KN =30X10^3 N, 2L= 1200, L= 600 mm, $\delta = 90\ mm$

σb =540Mpa, E= 2 x 10^5 N/mm^2

Here, b/t= 8 , thus b = 8t

The stress in leaf spring is given by

$$\sigma b = \frac{6\ W\ L}{n\ b\ t^2}$$

$$n \times b \times t^2 = \frac{6\ W\ L}{\sigma b} = \frac{6\ X\ 30\ X\ 10^3\ X\ 600}{540} = 200 \text{ X } 10^3 \text{.....I}$$ **...1 Marks**

$$\delta = \frac{6\ W\ L^3}{nE\ b\ t^3}$$

$$n \times b \times t^3 = \frac{(6\ W\ L^3)}{\delta \text{ X E}}$$

$$n \times b \times t^3 = \frac{6\ X\ 30\ X\ 10^3\ X\ 600^3}{90\ X\ 2\ X\ 10^5} = 2.16 \text{ X } 10^3 \text{..... II}$$ **...1 Mark**

Dividing equation II by equation I ,we get

t= 10.8 mm

b= 8t = 8 x 10.8 = 86.4 mm **.....1 Mark**

from equation I,

n x b x t^2 = 200 X 10^3

n x 86.4 x 10.8^2 = 200 X 10^3 n = 19.84 ≅ 20

Total Number of leaves n= 20 Numbers **.....1 Mark**

c)

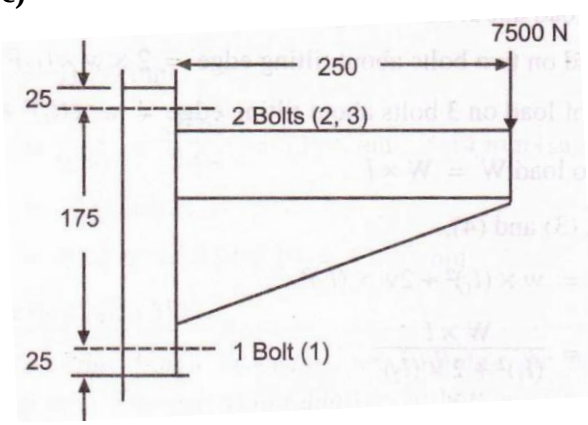

Arrangement Sketch: 1 Mark

Given Data:

W= 7500 N l1 = 25 mm l2 =l3=175+25 =200 mm

l = 250 mm Syt= 380 N/mm^2, F.O.S = 2.5

$$\sigma t = \frac{Syt}{fos} = \frac{380}{2.5} = 152 \text{ N/mm}^2$$

Direct Shear load on each bolt

$Ws = \frac{W}{n} = \frac{7500}{3}$ = 2500 N …… **1/2 Mark**

Max tensile $Load$ $wt = \frac{W\ x\ l\ x\ l2}{l1^2 + l2^2} = \frac{7500\ x\ 250\ x\ 200}{40^2 + 2\ x\ 200^2}$

=4595.58 N…… **1/2 Mark**

When bolts are subjected to shear as well as tensile loads ,then equivalent tensile load

$$W_{te} = \frac{1}{2}\left[W_t + \sqrt{(W_t)^2 + 4\,(W_s)^2}\right]$$

$$= \frac{1}{2}\left[4595.59 + \sqrt{(4595.59)^2 + 4\,(2500)^2}\right]$$

$$= 5693.35 \text{ N}$$

……..1 Mark

Knowing the value of load , Size of bolt

$$\sigma t = \frac{Wte}{\frac{\pi}{4}\ x\ dc^2}$$

$$152 = \frac{5693.35}{\frac{\pi}{4}\ x\ dc^2}$$

dc = 6.90 mm ,

do= 6.90/0.84 = 8.22 ≅ 10 mm …… **1 Mark**

Bolt size may be M10

d)Procedure for selection of bearing from manufacturer's catalogue.

(Correct Procedure OR Flow chart - 4 Marks)

1) Calculate radial and axial forces and determine dia. of shaft.
2) Select proper type of bearing.
3) Start with extra light series for given diagram go by trial of error method.
4) Find value of basic static capacity (co) of selected bearing from catalogue.
5) Calculate ratios Fa/VFr and Fa/Co.
6) Calculate values of radial and thrust factors.(X & Y) from catalogue.
7) For given application find value of load factor Ka from catalogue.
8) Calculate equivalent dynamic load using relation. Pe = (XVFr + YFA) Ka.
9) Decide expected life of bearing considering application. Express life in million revolutions L10.
10) Calculate required basic dynamic capacity for bearing by relation.
11) Check whether selected bearing has req. dynamic capacity, IF it not select the bearing of next series and repeat procedure from step-4.

OR

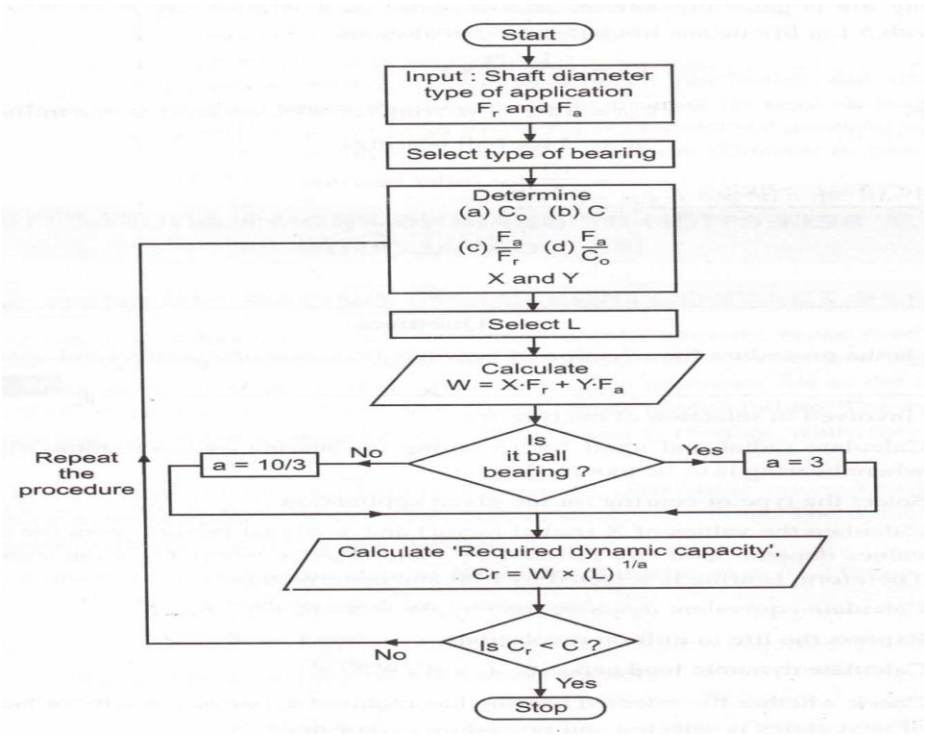

e) Application of bearings :……1 mark for Each

i) **Deep Groove Ball bearing :**

Application: Electric Motor

Reason: Capacity to take heavily axial load with high rotational speed

ii) Taper roller bearing :

Application: axle housing of automobile

Reason: ability to take high radial load as well as thrust load

iii) Thrust collar bearing:

Application: Clutch of automobile

Reason: ability to combine radial & axial load with min. speed

iv) Needle roller bearing:

Application: Differential of automobile

Reason: takes less radial space. it has high radial load carrying capacity.
