Important suggestions to examiners:

1) The answers should be examined by key words and not as word-to-word as given in the model answer scheme.
2) The model answer and the answer written by candidate may vary but the examiner may try to assess the understanding level of the candidate.
3) The language errors such as grammatical, spelling errors should not be given more importance. (Not applicable for subject English and communication skills)
4) While assessing figures, examiner may give credit for principle components indicated in a figure. The figures drawn by candidate and model answer may vary. The examiner may give credit for any equivalent figure drawn.
5) Credits may be given step wise for numerical problems. In some cases, the assumed constant values may vary and there may be some difference in the candidate's answers and model answer.
6) In case some questions credit may be given by judgment on part of examiner of relevant answer based on candidate understands.
7) For programming language papers, credit may be given to any other program based on equivalent concept.

Q.1	**Attempt any TEN of the following: 20 Marks**
a)	**State IE Rule 90**
Ans:	**I.E. Rule No.90:** **(2 Mark)** ➢ All metal supports of overhead lines and metallic fittings attached there to, shall be permanently and effectively earthed. ➢ For this purpose, a continuous earth wire shall be provided and securely fastened to each pole and connected with ordinary at 4 points in every 1.6 km spacing between the points is being as nearly equidistant as possible. Alternatively, each support and metallic fittings attached there to shall be efficiently earthed. ➢ Each stay wire shall be similarly earthed unless one insulator has been placed in at a height not less than 3.3 m from the ground.
b)	**List the material required to provide underground service connection.**
Ans:	**Following material required to provide underground service connection:** **(Any Four point expected: 1/2 mark each point)** 1. 2.5 Sqmm, 4 core Armored cable: (**Size of cable is depends on load & length of cable is depends on service connection premises)** 2. Brick, soft sand for protection of cable. 3. If cable is laid across the public road then Cement pipe, DWC pipe or GI pipe is required for better protection of cable 4. Cable lug as per required size. 5. Cable Gland as per required size 6. Feeder piller or cable box or bus bar and cable end box.

7. GI pipe as required size.
8. Cable bushing.
9. 8 SWG Wire
10. Clamps, saddles etc
11. As such all service connection material like main switch, MCB, Energy meter, Neutral link, IC cut out, earthing set, nut, screws, and wooden board. etc

c) State the rules for light and power sub circuit in electrical installation.

Ans: **Following rules for light and power sub circuit in electrical installation.**

Lighting Circuit :- **(1 Mark)**

- Each sub circuit should have 8 to 10 points (including lights, fans and 5A socket outlet)
- Each sub circuit should not exceed 800 watts.
- Make the no. of lighting sub circuit for lighting load.

$$No.\ of\ Lighting\ Sub\ circuits = \frac{Total\ Electrical\ lighting\ load}{800\ W}$$ **OR**

$$No.\ of\ Lighting\ Sub\ circuits = \frac{Total\ No.of\ lighting\ point}{10}$$

Power Circuit :- **(1 Mark)**

- For power load there should be maximum 3000W for 2 to 3 points.
- For power load there should be maximum 1000W for total 1 to 2 points. (old rule)
- Make the no. of power sub circuits for power load.

$$No.\ of\ power\ Sub\ circuits = \frac{Total\ electrical\ power\ load}{1000\ W\ or\ 2000\ W}$$

d) State the rating of lamp, fan, socket and power socket outlet used in Residential installation

Ans: **(2 Marks)**

S.No	Material name	Rating
i)	Lamp	28w,36w, or 40 watt, 100 watt
ii)	Fan	60 watt
iii)	Socket	100 watt
vi)	Power Socket outlet	1000 watt

e)	**State the purpose of following in conduit wiring i) Conduit box ii) Elbow**
Ans:	**i) Purpose of Conduit box:** **(1 Mark)** ➢ To hold and inspect incoming and outgoing terminals **ii) Elbow :** **(1 Mark)** ➢ To move the direction of the conductor path as per wiring installation at the right angles.
f)	**List Any Four examples of Commercial Unit**
Ans:	**(Any Two types are expected: 1 Mark each)** **Examples of commercial Installation: (Any Two examples expected)** 1) Hospital 2) Schools 3) Colleges 4) Banks 5) Shopping malls 6) Large temples 7) Auditorium 8) Cinema theaters 9) Show-rooms etc.
g)	**State the function of following in motor wiring circuit i) Main switch ii) Motor switch**
Ans:	**ii) Main switch:** To give the main supply to the motor with fuse protection inside. **(1 Mark)** **i) Motor switch:** To make ON/OFF the motor. **(1 Mark)**
h)	**How length of earth wire is decided in factory unit.**
Ans:	**(2 Marks)** ➢ Size of earth wire is minimum 8 SWG copper or 6 SWG GI wire for factory unit. ➢ Length of earth wire is always equal to two times length of cable for particular machine in the factory unit. ➢ For the factory unit two distinct earth wire are required. **Total length of earth wire** = 2 times total length of cable required for every machine + 1.0 Mtr (for main board circulation) + 1.5 (Distance between main board and Trench) + 5 Mtr (for earthing pit)

i)	**How decide fuse rating in factory unit.**
Ans:	**1. Reason of Fuse Rating is decided in industrial installation:** **(2 Mark)** ➢ Rating of main switch or fuse is based up the starting current of motor. ➢ For calculating starting current is considered 2 times that of full load current,. Thus main switch is decided. ➢ If number of motors are there, then main switch is decided from following formula. **Incoming current** = Starting current of highest rated m/c + Full load current remaining all m/c Thus from incoming current main switch is decided
j)	**Define the terms of ''contracts"**
Ans:	**Definition of Contract:-** **(2 Mark)** The agreement between two parties under some specific terms and conditions is known as contract.
k)	**State the meaning of negotiated tender.**
Ans:	**Meaning of negotiated tender:-** **(2 Marks)** In some special type of works there are no much bidders only one or two bidders are there. In such cases party no.1 (owner) and those bidder sits together and finalizes the tender price, tender conditions and any other special conditions after mutual discussion. This procedure is called as a negotiated tender. **OR** **Negotiated tender means:** After opening of tender again rates are discussed among all tender filling & reduced if possible
l)	**Define the term 'Earnest Money deposit' and 'Security deposit,**
Ans:	**i) Earnest Money deposit (EMD) :-** **(1 Marks)** EMD is a deposit taken as a guaranty from the bidder if the tender is accepted by the owner and if the contractor (bidder) refuses to accept that work in that case the EMD is not returned to that party it is generally 2 to 5 percent estimated cost. It is refundable to every unsuccessful (not considered) bidder.

ii) Security Deposit (SD):- **(1 Marks)**

Security deposit is amount or deposit given by the contractor to the owner till satisfactory completion of the project work. Generally it is a 5 to 10 % of the total estimated cost.

Q.2	**Attempt any FOUR of the following**	**16 Marks**
a)	**Draw and lable single line diagram for 3-phase induction motor connected to supply with star delta starter**	
Ans:	**Single line diagram 15hp, three phase, 440V, Induction motor -**	**(4 Mark)**

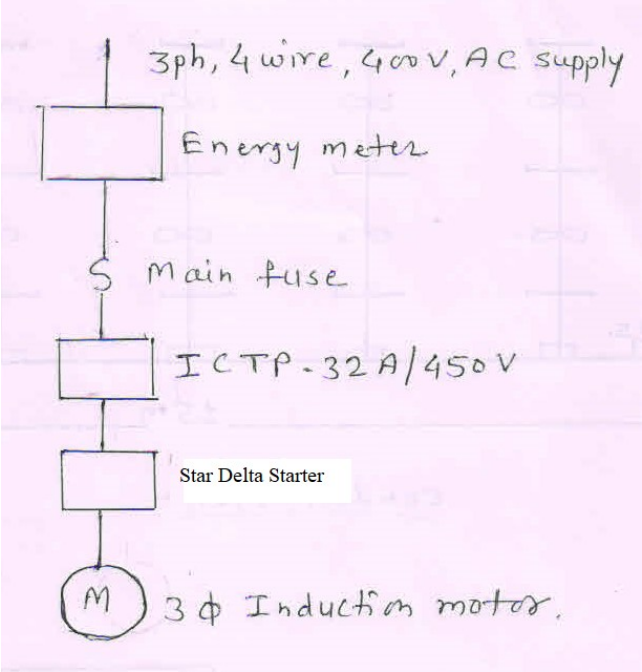

OR

Wiring diagram –

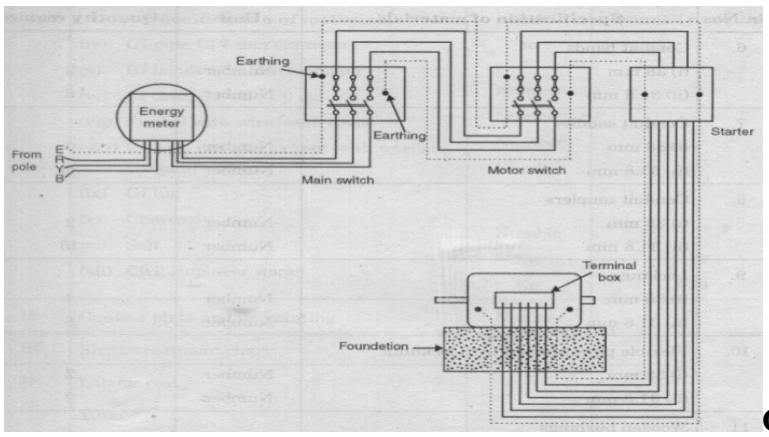

Or equivalent ckt dia.

b)	**Draw neat diagram with various components of service connections.**
Ans:	**(Any one method is expected- Diagram- 4 Mark)** **a) Overhead service connection:** 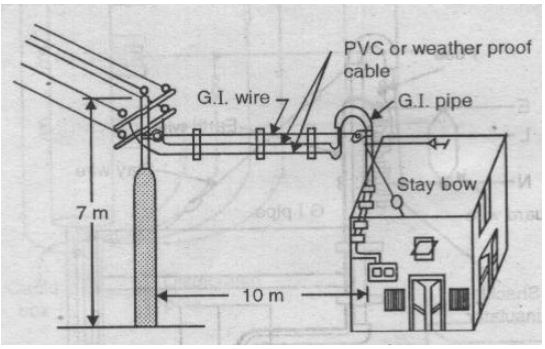 **OR equivalent figure** **b) Underground service connection:** 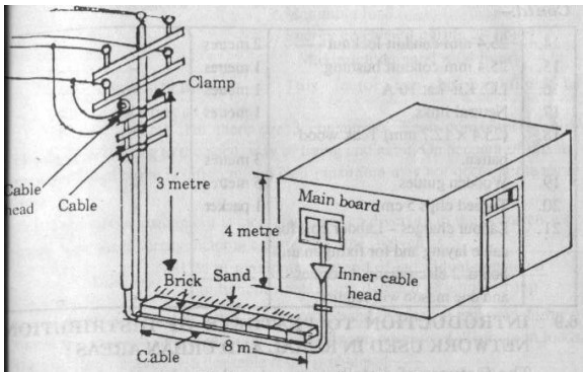 **OR equivalent figure**
c)	**State and explain conditions in Tender form.**
Ans:	**General conditions in Tender form:** **(4 Marks)** 1. Mode of submitting tender 2. Tender form in which tender has be submitted. 3. Name of inviting authority 4. Past experience 5. Major work in hand 6. Financial Capacity. 7. Equipment to be used 8. Time limit

9. Nature of work and location
10. Estimated cost of the work
11. Earnest money deposit
12. Security deposit
13. Right of rejection
14. Tender opening date, time and place

Special Tender condition:

1. Technical drawing details
2. Special conditions for the manufacturing or installation for particular electrical machine e.g. radio frequency interference, vibration level measurement, noise level measurement etc.
3. Any other special condition by mutual understanding of both parties it may be technical or financial.

d) Draw and list out the material of overhead service connection.

Ans: **Diagram of Overhead service connection:** **(Diagram- 2 Mark)**

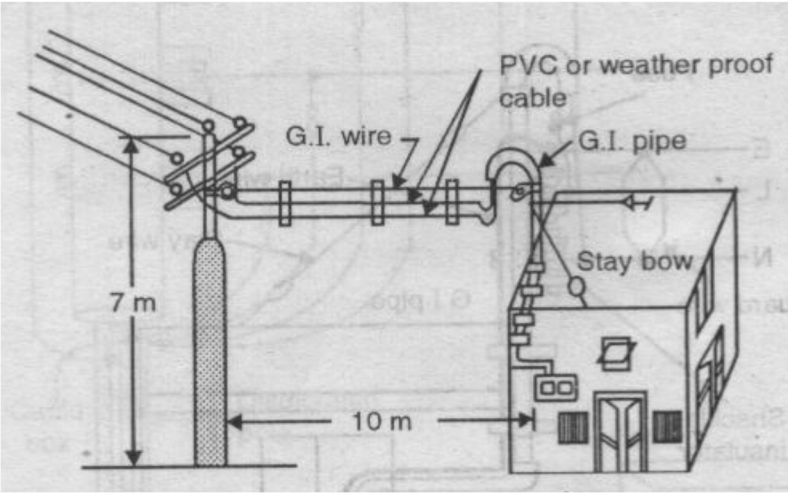

or equivalent figure

List out the material of overhead service connection: **(2 Mark)**

Two types of overhead service connection are used:

1) By using weather proof PVC Cable:
2) By using bare overhead conductors when the distance is more than 45 meter from the distribution pole

1) By using weather proof PVC Cable:

1. 4 Sqmm x 2 core PVC insulated cable or insulated wire 70 mtr length : (Size of cable is depends on load 3 KW. & length of cable is depends on service connection premises)
2. S shaped G I pipe 50 mm diameter 5 m
3. Earth wire 8 SWG 70 m
4. Meter board 01 Nos.
5. Stay wire 3 m
6. Stay insulator 01 Nos.
7. cement 01 Bag
8. sand 01 Bag
9. Pipe clamp 03 Nos
10. GI pipe 01 No
11. Saddles for pipe fitting Lumsum
12. Screw required for pipe fitting Lumsum
13. Earthing sundry
14. Earthing plate 01 Nos
15. SWG GI Wire
16. Brass nut bolt 02 Nos
17. Miscellaneous

OR

2) By using bare overhead conductors:

1. 2.5 Sqmm x 2 core PVC insulated cable or insulated wire approximately 6 mtr length: (Size of cable is depends on load 3 KW. & length of cable is depends on service connection premises)
2. 6 Sqmm Bare stranded conductor (130 Meter)
3. 8 SWG GI Wire (60 meter) or Earth wire 8 SWG 70 m
4. S shaped G I pipe 50 mm diameter 5 m
5. Meter board 01 Nos.
6. Stay wire 3 m

	7. Stay insulator 01 Nos. 8. cement 01 Bag 9. sand 01 Bag 10. Pipe clamp 03 Nos 11. GI pipe 01 No 12. Saddles for pipe fitting Lumpsum 13. Screw required for pipe fitting Lumpsum 14. Earthing sundry 15. Earthing plate 01 Nos 16. Brass nut bolt 02 Nos 17. LT Shackle insulator 02 Nos 17. Miscellaneous
e)	**Explain the meaning of following terms : i) Fuse link ii) MCB iii) Socket outlet of plug iv) ICDB**
Ans:	**i) Fuse -link:** **(1 Mark)** Fuse-link melts automatically at the time of fault or over load. Fuse must be replaced after the fault. **ii) MCB:** **(1 Mark)** Miniature circuit breaker operates automatically at the time of fault or over load. And it is used for the protection of electrical installation. They are available from 0.5 A to 100 Amps. They can be single pole, Double pole or three poles **iii) Socket outlet of plug :** **(1 Mark)** To give the supply to the load by using supply pins and also provided in electrical installation for adopting or connecting home appliances. **iv) ICDB (ICDP) :** **(1 Mark)** ICDP means Iron clad Double pole. Its function is for cut off operation of single phase supply.

f)	**Predict the type of starter required for the following : i) Induction motor of fractional HP rating ii) Induction Motor of rating upto 15 HP iii) Induction motor with high rating iv) Slip ring Induction motor of high rating.**
Ans:	**Name the starters used for following motors :** **(Each Name of Starter : 1 Mark)** **i) Induction motor of fractional HP rating:** a) Direct On Line starter **ii) Induction Motor of rating upto 15 HP:** a) Star-Delta Starter or b) Auto transformer starter **iii) Induction motors of high rating:** a) Star-Delta Starter b) Auto transformer starter c) Soft start starter. **iv) Slip ring Induction motor of high rating.** a) Rotor Resistance starter
Q.3	**Attempt any TWO of the following** **16 Marks**
a)	**A Seminar hall of 15m x 6m x 4m is to be fitted with 10 fan, 15 tubes and one power socket. Draw complete wiring diagram for above load and calculate total phase wire required from main board.**
Ans:	**Note: Credits may be given step wise for numerical problems. In some cases, the assumed constant values may vary and there may be some difference in the candidate's answers and model answer.** **Given Data: (The Assumed data may be vary** **(Give stepwise Marks as mention below)** $Total\ \ load\ in\ \ Hall = tubes \times watt\ = 15 \times 40 = 600\,W$ $= Fans \times watt\ = 10 \times 60 = 600\,W$ $= Power\ Sockets \times watt = 01 \times 1000 = 1000W$ Total load in Hall = tubes in Watt + Fans in Watt + Socket in watt + Power Sockect

i) $Total\ load\ in\ \ Hall = 600 + 600 + 1000 = 2200\ watt$ ---------- **(1/2 Mark)**

$$Total\ load\ in\ \ Amps = \frac{2200}{230} = 9.56 \cong 10\ Amp \quad assuming\ p.f. = 1$$ -- **(1/2 Mark)**

ii) $Total\ load\ in\ = \frac{1200}{800} = 1.5 \cong 2\ \ Nos\ lighting\ sub\ circuit$ ---------- **(1/2 Mark)**

iii) $Total\ load\ in\ = \frac{1000}{2000} = 0.5 \cong 1\ Nos\ \ Power\ sub\ circuit$ ---------- **(1/2 Mark)**

iv) **Length of Conduit:**

= 1+13.5+ 1.5 + 5 + 5 +5 + 5 +5+ 1+1+1+1+1

= 16 + 25 + 5

= 46 Mtr + 4.6 (10 %)

= 50 Mtr ---------- **(1/2 Mark)**

iv) **Length of Phase Wire:**

= 50 x 2 +20 % extra

= 100 + 20

= 120 mtr ---------- **(1/2 Marks)**

v) Rating Main switch: - since rated input current is 9.56 or 10 A.

Assumed that Staring current = 1.5 times rated current

So starting current = 1.5x 10 = 15 A

So Use:- ---------- **(1 Mark)**

236V, 16A, ISI mark Main switch of any company

Layout or Conduit Plan Drawing:- --- **(2-Marks)**

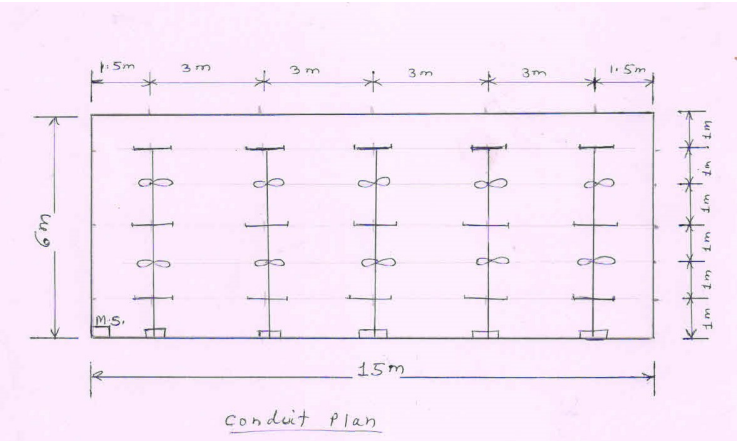

or equivalent figure

Wiring Diagram: **(2-Marks)**

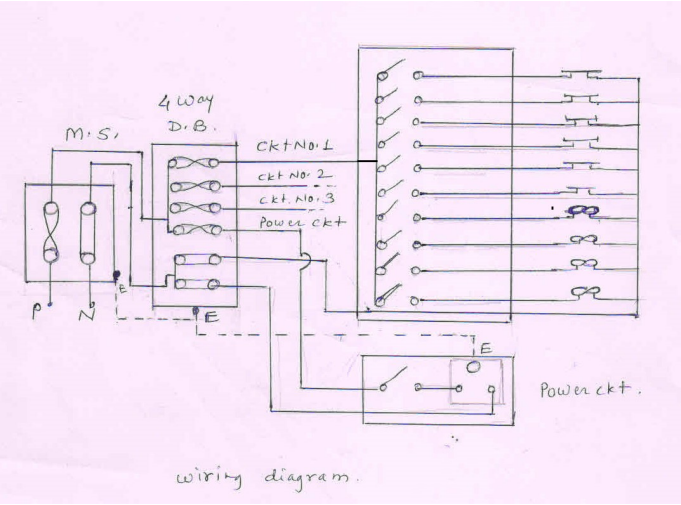

or equivalent figure

b) **Estimate the quantity of material and cost of installation required for the PVC casing capping wiring system used in house. The plan of which is shown in figure No. 1. Assume height of roof 4m. One plug point is to be provided in each room and power socket in Bathroom.**

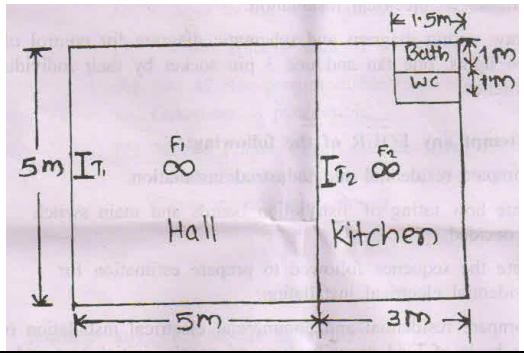

Ans: **(Costing of material is not required marks are only allotted for Material list: 8 Point Expected Each Point: 1 Marks –Total 8 Marks)**

$$Total\ \ load\ in\ \ Installation = tubes \times watt\ \ = 2 \times 40 = 80\,W$$

$$= Fans \times watt\ \ = 2 \times 60 = 120\,W$$

$$= Lamps in\ WC\&bath \times watt = 2 \times 40 = 80W$$

$$= 5\ Plug \times watt\ \ = 2 \times 100 = 200\,W$$

$$= PowerSocket in\ bath \times watt = 1 \times 1000 = 1000W$$ **-- (1/2 Mark)**

$$Totalload in\ \ Hall = tubes in\ Watt + Fans in\ \ Watt + Lamps in\ WC\&Bath + PlugSocket + Powersock$$

i) $$Total\ load\ in\ \ Installation = 80 + 120 + 80 + 200 + 1000 = 1480\ \ watt$$ **- (1/2 Mark)**

$$Total\ load\ in\ \ Amps = \frac{1480}{230} = 6.43 \cong 7\ Amp$$ **--- (1/2 Mark)**

So Use:- **---------- (1/2 Mark)**

230V, 16A, ISI mark Main switch of any company and lighting load 480 watt & 6 points & one power in bath room

Therefore one lighting & Power sub circuit is required

Wiring Layout: **--- (1 Mark)**

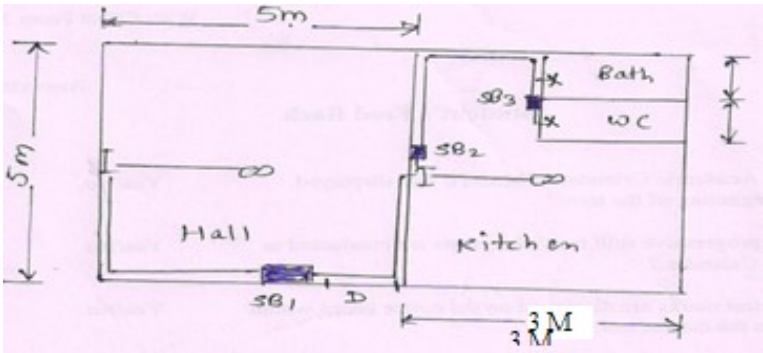

or equivalent figure

Length of the conduit: --- (1/2 Mark)

$$= \overset{V}{1.5} + \overset{H}{4} + \overset{H}{2.5} + \overset{V}{4} + \overset{H}{2.5} + \overset{H}{2.5} + \overset{H}{2.5} + \overset{H}{3} + \overset{H}{2} + 10\%$$
$$= 11.5 + 10 + 10\%$$
$$= 21.5 + 10\%$$
$$= 21.5 + 2.2$$
$$= 24.2 \approx 24\ Mtr$$

Length of the Wire: --- (1/2 Mark)

$$= 24 \times 3 + 20\%$$
$$= 72 + 20\%$$
$$= 72 + 14.4$$
$$= 86.4 \approx 87\ Mtr$$

Schedule of Material: (4 Mark)

S.No	Material	Quantity	Rate	Total Amount
1	ICDP 250V, 16A	01	250.00	250.00
2	20A MCB for Power load	01	175.00	175.00
3	6A MCB for lighting load	01	45.00	45.00
4	PVC conduit (3 Mtr pipe) 1.5mm thickness	24 Mtr	15.00	360.00
5	1 Sqmm Copper Wire (90 mtr bundle)	01 mtr	650.00	650.00
6	2.5 Sqmm Copper Wire	20 Mtr	12.00	240.00
7	Copper Earthing Plate	01	490.00	490.00
8	Earthing Sundry	lumsump	200.00	200.00
9	6A Switch	08	15.00	120.00
10	6A Three point socket	02	18.00	36.00
11	16 A Power socket	01	55.00	55.00
12	Ceiling rose	04	10.00	40.00
13	Angle holder	02	10.00	20.00
14	Junction Box	08	10.00	80.00
15	4 x 4 Switch board with cutting	03	20.00	60.00
16	25 x 8 screws	01	35.00	70.00
17	Raval plug	03	05.00	15.00
18	Labour Charges	08	110.00	880.00
		Total Amount :-		**3786.00**
19	Contingencies+ profit margin	10% Amount:-		378.60
		Total Amount:-		**4164.60**
	iii) Cost of work:	Say Total Amount:		**4165.00**

c) **Estimate the cost of installation for workshop as shown in figure No.2**

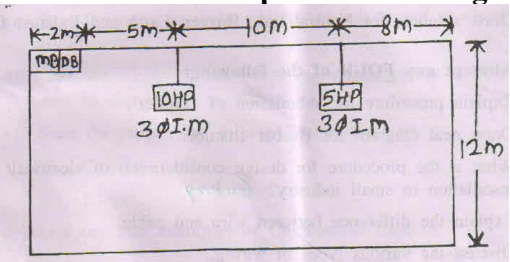

Fig. No. 2

Ans: **(Costing of material is not required marks are only allotted for Material list: 8 Point Expected Each Point: 1 Marks –Total 8 Marks)**

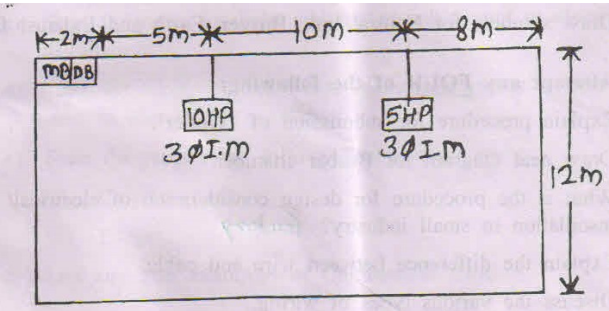

Fig. No. 2

i) Rating for 10 HP, 3-Ph I.M :-

$$Total\ power = Total\ H.P \times 735.5$$

$$Total\ power = 10\ HP \times 735.5 = 7355\ watt$$

$$Total\ power = 73555\ watt$$ ------ **(1/2 Marks)**

$$Rated\ input\ current\ I_L = \frac{HP \times 735.5}{\sqrt{3}\ V_L \times \eta \times Cos\phi}$$

$$Rated\ input\ current\ I_L = \frac{7355}{\sqrt{3} \times 415 \times efficency \times P.f}$$

$$Rated\ input\ current\ I_L = \frac{7355}{\sqrt{3} \times 415 \times 0.85 \times 0.85}$$

$$Rated\ input\ current\ I_L = 14.162\ Amp$$ --- **(1/2 Marks)**

Starting current = 2 x 14.162 = 28.324 Amp ---------- **(1/2 Marks)**

So use, 6 Sqmm , 4 core cable copper cable , 500V grade should be selected rating of SFU, ICTP switch is 32A, 450V grade should be selected. ------- **(1/2 Marks)**

ii) Rating for 5 HP, 3-Ph I.M :-

$$Total\ power = Total\ H.P \times 735.5$$

$$Total\ power = 5\ HP \times 735.5 = 3677.5\ watt$$

$$Total\ power = .1471\ watt$$ ------ **(1/2 Marks)**

$$Rated\ input\ current\ I_L = \frac{HP \times 735.5}{\sqrt{3}\ V_L \times \eta \times Cos\phi}$$ ------ **(1/2 Marks)**

$$Rated\ input\ current\ I_L = \frac{3677.5}{\sqrt{3} \times 415 \times efficency \times P.f}$$

$$Rated\ input\ current\ I_L = \frac{1471}{\sqrt{3} \times 415 \times 0.85 \times 0.85}$$

$$Rated\ input\ current\ I_L = 7.081\ Amp$$

Starting current = 2 x 7.081 = 14.162 Amp ---------- **(1/2 Marks)**

So use, 4 Sqmm , 4 core cable copper cable , 500V grade should be selected rating of SFU, ICTP switch is 16A, 450V grade should be selected. --------**(1/2 Marks)**

Schedule of Material : **(4 Marks)**

S.No	Material of Material	Quantity	Cost of material
1	32 A Busbar with Netural link	01	1750.00
2	3-ph,4 wire 415V, 15-30A, A.C. supply Energy Meter	01	500.00
3	ICTP 450V,16A	02	750.00
4	ICTP 450V,32A	01	1000.00
5	DOL Starter	01	2000.00
6	Star-Delta Starter	01	3000.00
7	8 SWG Earthing Wire	0.5.kg	225.00
8	60 cm x 60cm x6.36 mm Copper Earthing Plate	01	450.00
9	Earthing nut-board	04	35.00
10	Earthing Sundry	lumsump	3500.00
11	12x12 Wooden Board for SDB	05	25.00
12	Screw 3 inch length	18 No	30.00
13	Screw 1 inch length	10 No	15.00

14	R,Y,B Indication Lamp	03	60.00
15	PVC Tape	04	40.00
16	Saddles	1 box	25.00
17	32mm PVC conduit (3 Mtr pipe) 1.5mm thickness	7 pipe	490.00
18	6 Sqmm x 4 Copper armored cable	15 Mtr	900.00
19	4 Sqmm x 4 Copper armored cable	10 Mtr	400.00
20	Junction Box	03 approx.	30.00
21	Lug & gland	06 approx	130.00
21	Labour Charges	Lumsum	3000.00
		Total Amount :-	**18355.00**
22	Contingencies+ profit margin	10% Amount:-	1835.50
		Total Amount:-	**20190.50**
	iii) Cost of work:	Say Total Amount:	20191.00

Q.4 Attempt any FOUR of the following 16 Marks

a) Differentiate between underground and overhead service connection on the basis of maintenance cost, safety, appearance and area of applications

Ans: **(1 Mark each point)**

S.No	Basis	Underground service connection	Overhead service connection
1	**Maintenance cost**	More	less
2	**Safety**	More safety	Less safety
3	**Appearance**	Appearance is good.	Appearance is poor. OR not so good
4	**Area of applications**	Industrial and commercial applications	Residential Application

b)	**Draw a neat labelled sketch of Plate earthing**
Ans:	**Diagram for plate earthing :** **(4 Marks)** 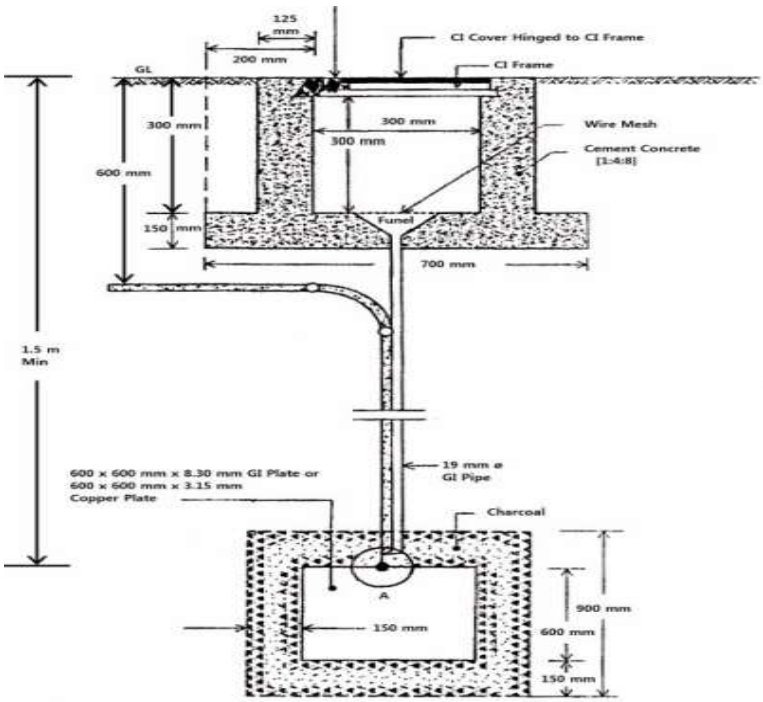 **or equivalent figure**
c)	**With the help of single line diagram explain motor wiring circuit in factory unit installation.**
Ans:	**Following rules for motor wiring circuit in factory unit installation.-** **(Any four points expected: 1/2 Mark each)** 1. Each motor should be provided with separate cable from distribution board or main board. 2. Each motor should be individually controlled 3. Rating of fuse, ICTP or ITDP, & starter should be based on starting current which is assumed two times rated input current. 4. The motor should be earthed at two distinct terminals by 8 SWG copper wires. 5. The voltage drop in the cable should be with the tolerance limit + or – 5 % 6. All protective measures should be installed for each motor. 7. Control unit should be near to motor as far as possible. 8. Suitable KVAr rating of capacitor should be installed near to motor.

	Single line diagram explain motor wiring circuit: 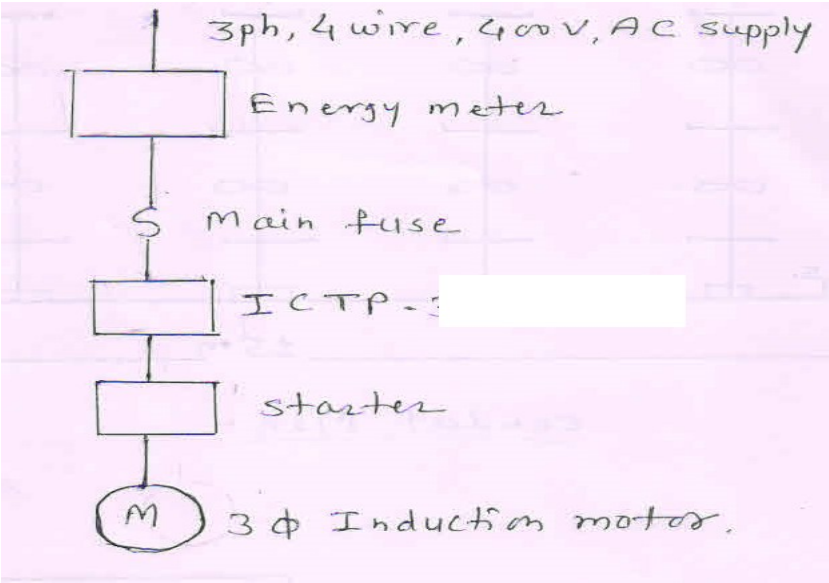 **or equivalent circuit**
d)	**State four essential requirements of valid contract**
Ans:	**Following requirements of valid contract:** **(Any 4 Point Expected : 1 Mark each)** 1. Contract should be written. 2. Contract should be signed by proper witness 3. Contractor licenses should be valid. 4. Contract should be signed by competent authority. 5. Contract should be signed by proper authorized persons. 6. It should be legally challenged in the court.
e)	**State the sequence followed to prepare the estimate for a commercial electrical installation.**
Ans:	**(Minimum Eight point expected: 1/2 each point: Total 4 Marks)** **The following sequence to be followed for the preparation of estimate of commercial electrical installation:** 1) Find out the type of load and total electrical load for the given commercial installation. 2) Differentiate this total electrical load in lighting load and power load. 3) Make the no. of lighting sub circuit for lighting load. $$No.\ of\ \ Lighting\ \ Sub\ circuits = \frac{Total\ \ Electrical\ lighting\ load}{800\ W}$$ **OR**

$$No.\ of\ \ Lighting\ \ Sub\ circuits = \frac{Total\ \ No.of\ \ lighting\ \ point}{10}$$

4) Make the no. of power sub circuits for power load.

$$No.\ of\ \ power\ Sub\ circuits = \frac{Total\ electrical\ \ power\ load}{2000\,W\ \ or\ 3000\,W}$$

OR

$$No.\ of\ \ power\ Sub\ circuits = \frac{Total\ \ No.of\ \ power\ \ points}{2\ or\ 3\ \ points}$$

5) Find out total power consumption of every lighting and power sub circuits.
6) Find out rated Input current for every lighting and power sub circuit.
   V1 $\cos\phi$ P = Input power for every sub circuit
   V = voltage = 230 V , I = Input current for every sub circuit
7) Determine the size of wire required for every sub circuit by considering overload starting surge and future expansion.
8) Draw the single line diagram.
9) Mark the batten on plan layout.
10) Find out the total length of batten required for every sub circuit and whole commercial installation.
11) Find out the total length and size of wire required for every sub circuit.
12) List out the material required for whole commercial installation.
13) Find out cost of material and labour in estimation chart.
14) Find out the total cost of estimation with profit margin and contingencies charges.
15) Find out per point charges.
16) Draw the circuit diagram.

f) Draw wiring diagram and schematic diagram for control of two lights, one fan and one 3 pin socket by their individual switches.

Ans: (i) Wiring diagram : **(2 Marks)**

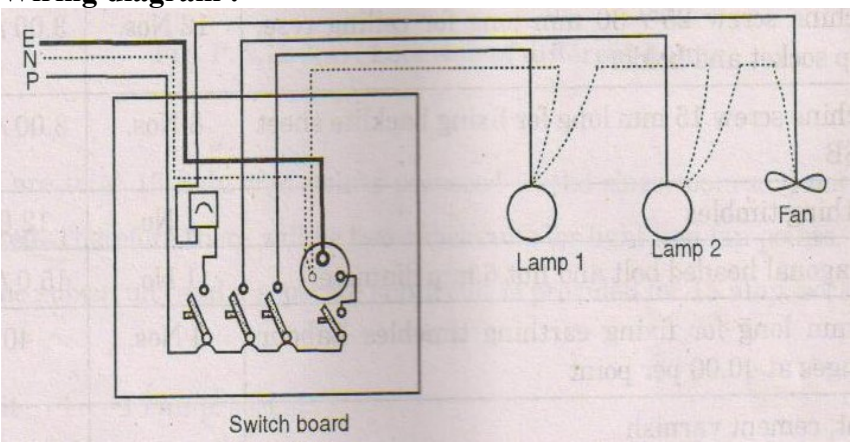

or equivalent figure

(ii) Schematic diagram: **(2 Marks)**

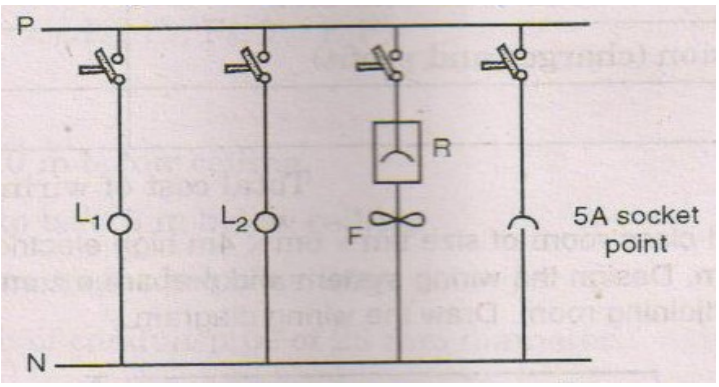

or equivalent figure

Q.5 Attempt any FOUR of the following

a) Compare residential and industrial installation

Ans: **(Any Four Point expected : 1 Mark each)**

S.No	Basis	Residential Electrical Installation	Industrial Electrical Installation
1	**Location**	Highly population density area	In industrial estate or MIDC area
2	**Cost**	Less	More
3	**Precautions**	All safety precautions should be taken	All precautions should be taken
4	**Supply**	Generally 1-ph, 230V AC supply is provided	Generally 3-ph, 400V AC supply is provided
5	**Tariff**	Block rate tariff is applied	Tariff for industrial load is different
6	**Power factor correction equipment**	Generally not required	Required

b) State how rating distribution board and main switch is decided.

Ans: **Selection of rating of main switch and distribution, board is done in residential building installation:**

Given Data: (All data is assumed it may vary or it may not be available, there will be only steps and this steps are expected) **(Give stepwise Marks as mention below)**

	$Total\ \ load\ in\ \ = tubes \times watt\ \ = 4 \times 60 + 3 \times 100 = 540\,W$ $= Fans \times watt\ \ = 4 \times 60 = 240\,W$ $= Sockets\ \times\ watt = 6 \times 60 = 360\,W$ $i)\ Total connected lighting load in a\ house = 540 + 240 + 360 = 1140 W\ or\ 1.14 KW$, **- (1/2 Mark)** $ii)\ Total\ connected\ \ Power\ load\ \ in\ a\ house = 4 \times 1000 = 4000\,W\ or\ \ 4.0\,KW$, **(1/2 Mark)** $Total\ \ load\ \ connected\ = 1140 + 4000 = 5140\ or\ \ 5.14\ \ \ KW$ iii) Total load in $= \frac{1140}{800} = 1.425 \cong 2$ Nos lighting sub circuit Total load in $= \frac{4000}{200} = 2$ Nos Power sub circuit **Distribution Board**: So, 4 number of MCB are required ---------- **(1 Mark)** iv) Total Connected load is 5140 watt, so Number of sub circuit = 4 Nos. **v) Current rating of iron clad main switch** = since more current is 23 A. Current rating **Iron clad main switch** = 32 A ---------- **(1 Mark)** **vi) Value of current rating of iron clad main switch:** ---------- **(1 Mark)** **So Use: -** 250V, 32A, ISI mark Main switch of any company
c)	**State the sequence followed to prepare estimation for residential electrical installation**
Ans:	**(Note: Similar sequence to be followed for preparing estimate for a residential installation)** **(Any Eight types expected 1-Mark each)** **Following sequence to be followed for preparing estimate for a residential installation:-** 1) Find out the total electrical load for the given residential installation. 2) Differentiate this total electrical load in lighting load and power load. 3) Make the no. of lighting sub circuit for lighting load. $No.\ of\ \ Lighting\ \ Sub\ circuits = \frac{Total\ \ Electrical\ lighting\ load}{800\,W}$

OR

$$No.\ of\ Lighting\ Sub\ circuits = \frac{Total\ No.of\ lighting\ point}{10}$$

4) Make the no. of power sub circuits for power load.

$$No.\ of\ power\ Sub\ circuits = \frac{Total\ electrical\ power\ load}{1000\ W\ or\ 2000\ W}$$

OR

$$No.\ of\ power\ Sub\ circuits = \frac{Total\ No.of\ power\ points}{2\ or\ 3\ points}$$

5) Find out total power consumption of every lighting and power sub circuits.
6) Find out rated Input current for every lighting and power sub circuit.
   V1 cos ϕ P = Input power for every sub circuit
   V = voltage = 230 V I = Input current for every sub circuit
7) Determine the size of wire required for every sub circuit by considering overload starting surge and future expansion.
8) Draw the single line diagram.
9) Mark the batten on plan layout.
10) Find out the total length of batten required for every sub circuit and whole residential installation.
11) Find out the total length and size of wire required for every sub circuit.
12) List out the material required for whole residential installation.
13) Find out cost of material and labour in estimation chart.
14) Find out the total cost of estimation with profit margin and contingencies charges.
15) Find out per point charges.
16) Draw the circuit diagram.

d) Compare residential and commercial electrical installation on the basis of load capacity, type of supply, initial cost and type of load

Ans: **(Each points : 1 Mark)**

S.No	Basis	Residential Electrical Installation	Commercial Electrical Installation
1	Load capacity	Less	High
2	Type of Supply	Generally single phase	Generally 3 phase
3	Initial Cost	Less	High
4	Type of Load	Lighting load is more, power load is less.	Power load is more, lighting load is comparatively less.

e)	**State the procedure for selection of wire and cable rating in residential building electrification.**
Ans:	**(Rating point -2 Mark and Procedure – 2 Mark)** **Ratings of Wires & cable are decided by the following points:-** ➢ Total Electrical load of residential installation ➢ Supply providing to the motor which is used in installation. ➢ Power factor of the residential installation ➢ Future expansion. ➢ Starting current, over load and momentary short circuit of the load. **The procedure is as follows:-** 1. Measure all electrical load for lighting sub circuit. 2. Measure all electrical load of power sub circuit. 3. Find out total Electrical load = Lighting load + power load 4. Find out rated input current = P = V1 cos ϕ 5. Assume V= 230V, cos ϕ = 0.8 6. Determine rated input current. 7. Find out starting current for residential installation. Starting current is 1.5 times rated input current for Starting current, over load and momentary short circuit of the load. 8. Determine the size of wire or cable according to starting current
f)	**Draw symbols Neutral link, Buzzer, Earth and exhaust fan**
Ans:	**(1 Mark each Symbols)** **i) Neutral Link :** 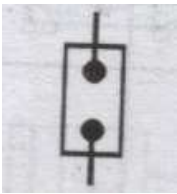 **ii) Buzzer**  **iii) Earth:**  **iv) Exhaust fan :** 

Q.6	**Attempt any FOUR of the following**	**16 Marks**
a)	**Explain procedure for submission of 'Tender'**	
Ans:	**Procedure of submission of Tender:-** **(4 Marks)** ➢ The tender is submitted from party No.2 (Bidder) to party No.1 (Owner) in sealed envelopes within the specification date & time period. ➢ The is submitted in envelops No.2 titled by envelop No.1 & envelop No.2. ➢ The content in every envelope is given an above. **OR** ➢ The system of submitting tender documents is also called as two envelope system. ➢ The treasury challan, deposit, call receipt, forwarding letter the copies of registration certificate, income tax clearance certificate, and list of machinery to be used to be sealed in one envelope. ➢ The tender set itself with quoted value should be sealed in another envelope: these two sealed envelopes should again be put in one coverer and sealed. On the top of this cover, the name of the work, address of the receiving authority should be written. These envelopes are then handed over in person or send by post to the address mentioned before the specified time and date **OR** ➢ According to old procedure three envelopes are there and in third envelope rate offered by the tenderer is given and it is mention as **" Envelop No.3"**	
b)	**Draw neat diagram of Busbar Chamber**	
Ans:	**Diagram showing the arrangement of busbar Chember:** **(4 Marks)** 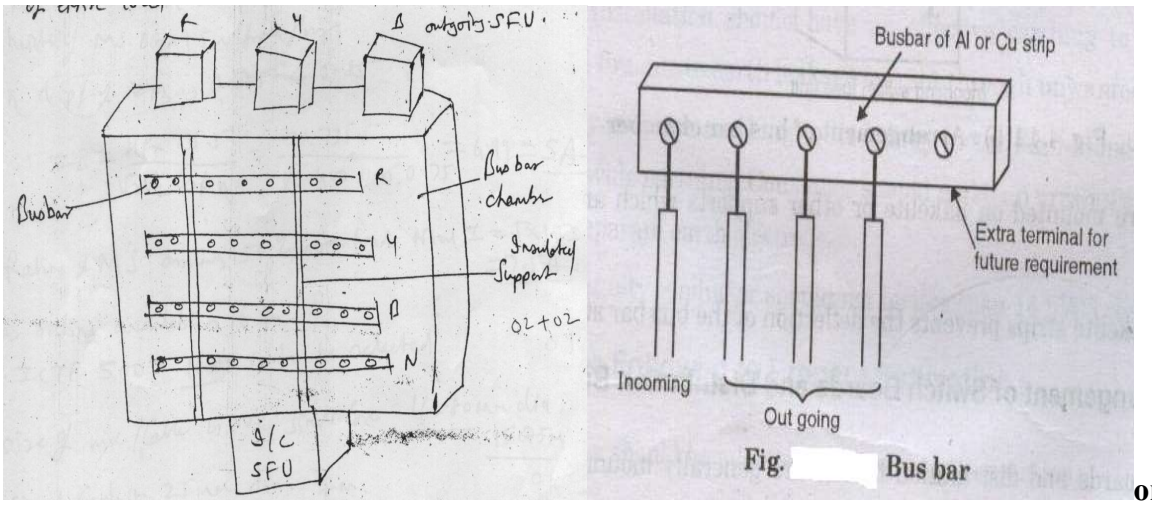 **Fig. Bus bar** **or equivalent figure**	

c)	**What is the procedure for design consideration of electrical installation in small industries?**
Ans:	**(Minimum Eight point expected: 1/2 each point)** **The following procedure for design consideration of electrical installation in small industries:** 1) Find out output power of every machine in watts. 1) 1 HP = 735.5 w 2) 1 BHP = 746 w 3) 1 KVA = 1000 VA. Assume P.f. 2) Find out Input power of every machine by assuming the efficiency of every machine. Input power of machine = $\frac{\text{output power of machine}}{\text{Efficiency of machine}}$ 3) Find out Input current of every machine for 1-ph machine. Input power = V I cos ϕ V = Input voltage = 230V Cos ϕ = P.f. I = Input current If the machine is 3-ph Input power = $\sqrt{3}\ V_L I_L \cos\phi$ V_L = Line voltage = 400V I_L = Line current or Input current Cos ϕ = P.f. 4) Find out size and core of cable required for every machine .size of cable is decided by starting current. Which is assumed two times Input current to sustend starting surge, overload momentary short circuit and future expansion. 5) Find out total Electrical load of given factory. 6) Determine the Input current required for whole factory. $P = \sqrt{3}\ V_L I_L \cos Ø$

7) Determine the size & core of Input cable required for whole factory. To decide the size of current is assumed two times rated Input current for future expansion, overload starting surge and momentary short circuit.
8) List out the material required for factory electrification.
9) Make the estimation chart for material and labour also.
10) Find out total cost of estimation by assuming contingencies changes and profit margin.

OR

Following general guidelines for small Industries:-

i) Input current of the motor
ii) Selection of size of cable and conduit
iii) Determination of rating of fuse
iv) Selection of rating of main switch
v) Distance between Main board and control board
vi) Type of supply for every machine
vii) Earthing type and its size.

d) Explain difference between wire and cable

Ans: **(Any Four Points expected: 1 Mark each)**

S.No	Wire	Cable
i)	It is generally single core	It may be single core, Two core, 2.5 core, 3 core, 3.5 core and 4 core
ii)	Wires are used for LT Supply	Cables are used for LT and HT supply
iii)	Current & Voltage capacity for wire is less	Current & Voltage capacity for cable is More
iv)	Cost of wire is less.	Cost of cable is more.
v)	There are following types of wires: VIR, PVC, TRS/CTS/flexible etc	There are following types of cables: armored and unarmored.

e) Discuss the various types of wiring.

Ans: **(Any four types are expected: 1/2 Mark each)**

List the types of Internal wiring in residential installations –

1) Cleat wiring
2) Batten wiring

3) Wooden casing capping wiring
4) PVC conduit wiring
5) PVC casing capping wiring
6) Concealed wiring

Explanation : **(Any one types of explanation are expected: 2 Marks)**

1) Cleat wiring:

The cost of wiring is less. The PVC or VIR wires are carried through porcelain cleats. This wiring is very simple and used for temporary application. The wires are exposed to the sky, so there are chances of mechanical injury. This type of wiring is rarely used.

2) Batten Wiring:

The cost of wiring is also less but more than cleat wiring. The PVC or VIR wires are carried through batten. This wiring is very simple and now a day it is rarely used. More number of wires can be carried through the batten. Wires are exposed to the sky, so there are chances of mechanical injury. Fault finding is easy.

3) Wooden Casing capping wiring:

The cost of wiring is more. The PVC or VIR wires are carried through wooden casing capping. This wiring is very simple but due to high cost and now a day it is rarely used. More number of wires can be carried through the wooden casing capping. Wires are not exposed to the sky, so there are less chance of mechanical injury but these type of wiring catch the fire easily.

4) PVC Conduit wiring:

The cost of wiring is less. The PVC or VIR wires are carried through PVC conduit. This wiring is very simple. More number of wires can be carried through the different size of PVC conduit. Wires are not exposed to the sky, so there are less chances of mechanical injury. future expansion is not easily possible.

5) PVC Casing Capping:

The cost of wiring is slightly more. The PVC or VIR wires are carried through PVC casing capping. This wiring is very simple so it is widely used. More number of wires can be carried through the different size of PVC casing capping. Wires are not

exposed to the sky, so there are less chances of mechanical injury. Future expansion is possible and repairing and maintenance is easily possible.

6) Concealed wiring:

The cost of wiring is very high. The PVC or VIR wires are carried through the channels made in ceilings and walls at the time of building construction. This wiring is slightly difficult but appearance is very good, so it is widely used. More number of wires can be carried through the different size of channels. Wires are not exposed to the sky, so there are less chances of mechanical injury. Fault finding is difficult. Future expansion is not possible and repairing and maintenance difficult.

f) Mention the general rules used for wiring of residential building

Ans: **Following general rules used for wiring of residential building:-** **(4 Marks)**

1) Find out the total electrical load for the given residential building.
2) Differentiate this total electrical load in lighting load and power load.
3) Make the no. of lighting sub circuit for lighting load.

$$No.\ of\ \ Lighting\ \ Sub\ circuits = \frac{Total\ \ Electrical\ lighting\ load}{800\ W}$$

OR

$$No.\ of\ \ Lighting\ \ Sub\ circuits = \frac{Total\ \ No.of\ \ lighting\ \ point}{10}$$

4) Make the no. of power sub circuits for power load.

$$No.\ of\ \ power\ \ Sub\ circuits = \frac{Total\ \ electrical\ \ power\ load}{1000\ W\ \ or\ \ 2000\ W}$$

OR

$$No.\ of\ \ power\ \ Sub\ circuits = \frac{Total\ \ No.of\ \ power\ \ points}{2\ or\ 3\ points}$$

5) Find out total power consumption of every lighting and power sub circuits.
6) Find out rated Input current for every lighting and power sub circuit.

$P = V1 \cos\phi$ P = Input power for every sub circuit

V = voltage = 230 V

I = Input current for every sub circuit

7) Determine the size of wire required for every sub circuit by considering overload starting surge and future expansion.
8) Draw the single line diagram.

	9) Mark the batten on plan layout. 10) Find out the total length of batten or (conduit) required for every sub circuit and whole residential installation. 11) Find out the total length and size of wire required for every sub circuit. 12) List out the material required for whole residential installation. 13) Find out cost of material and labour in estimation chart. 14) Find out the total cost of estimation with profit margin and contingencies charges. 15) Find out per point charges. 16) Draw the circuit diagram.

----------END----------